Image courtesy of OKZ Holding Baltija UAB

BuiltWorks Tutorial

Volume 1. Modeling basics

SolidACE

2012

www.solidace.com
www.builtworks.eu

BuiltWorks Tutorial

Volume 1. Modeling basics

This document has been created with the intention to help the user of BuiltWorks software application to understand the basic tools, techniques and workflows working with BuiltWorks to create demo models for self learning purposes. It is assumed that user of this manual is familiar with SolidWorks software from Dassault Systèmes SolidWorks Corp.

All effort was made to make this document complete and accurate; however no warranty or fitness is implied. SolidACE Ltd. has neither liability nor responsibility to any person or entity with respect to any loss or damages in connection with or arising from the information provided in this manual or using the described software applications.

The information is provided on "as-is" basis. The menu texts, titles of windows, button images or texts, texts of dialogs and screenshot pictures may differ from the actual view of the software applications.

SolidACE and BuiltWorks logo are either registered or unregistered trademarks or service marks of SolidACE Ltd. All other brands, product names and registered or unregistered trademarks are property of their respective owners.

Copyright © 2012 SolidACE, Ltd. All rights reserved.
Lukiškių str. 3, VI floor
LT-01108, Vilnius, Lithuania
Email: info@solidace.com
www.solidace.com

v.3.0 January, 2012

Table of Contents

Introduction 1

Purpose of this Tutorial 1

Prerequisites 1

I. Creating a new document 2

II. Creating Grid System 3

III. Creating Member Group (columns) between two Sketch Points 5

IV. Creating Member Group (beams) on selected Sketch Segments 8

V. Creating Member Array (secondary beams) 10

VI. Exporting model to Structural Analysis program (STAAD.Pro) 12

VII. Analyzing the model in STAAD.Pro 14

VIII. Importing analysis results from STAAD.Pro 18

IX. Aligning Members 20

X. Detailing Connections – Trim 22

XI. Copying Connections 25

XII. Creating an End Plate 29

XIII. Generating Drawings and BOM 31

User Notes 37

Introduction

BuiltWorks is a software application for real-time steel design within the native SolidWorks environment, providing tools for 3D solid parametric modeling, analysis and design, connection detailing and automated generation of both drawings and bills of materials.

Purpose of this Tutorial

This tutorial covers briefly all main modeling, detailing and interoperability functionality and full workflow in working with BuiltWorks:

- Creating structural Grid System
- Placing and aligning Members (Columns, Beams)
- Checking the structure in external Analysis program (STAAD.Pro)
- Detailing Connections (Trimming Members, adding End Plates)
- Updating Cut Lists and generating Drawings, inserting Bill of Materials

After completing this tutorial you will know the main typical workflow of structural modeling and the tools that BuiltWorks provides for that, and will be able to start creating your own typical steel structures.

Prerequisites

To complete this tutorial you will need:

- **Required**: **SolidWorks 2010/2011/2012** (SP1 or later) installed on your system
- **Required**: **BuiltWorks 2010/2011/2012** (according to SolidWorks version) installed on your system (please check www.solidace.com if you don't have BuiltWorks)
- **Optional**: STAAD.Pro 2006 or 2007 or V8*i* installed on your system (if you don't have STAAD.Pro, you may use analysis results file ***BW_Manual_1_results.std*** provided with this manual)

I. Creating a new document

Start this tutorial with a new SolidWorks Assembly document – BuiltWorks allows users to create structures working in assembly mode.

1. Click **New** button (Standard toolbar).

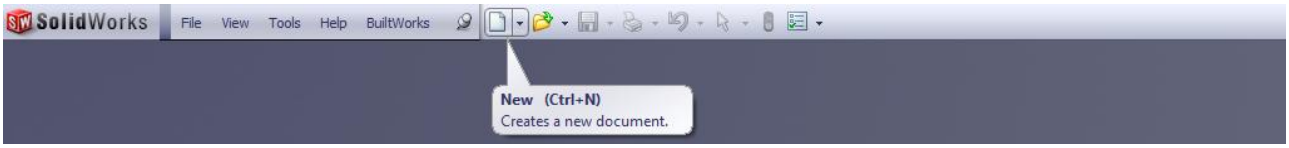

Fig. 1 Start creating a new document

2. In the dialog box **New SolidWorks Document** select **Assembly** and click **OK**.

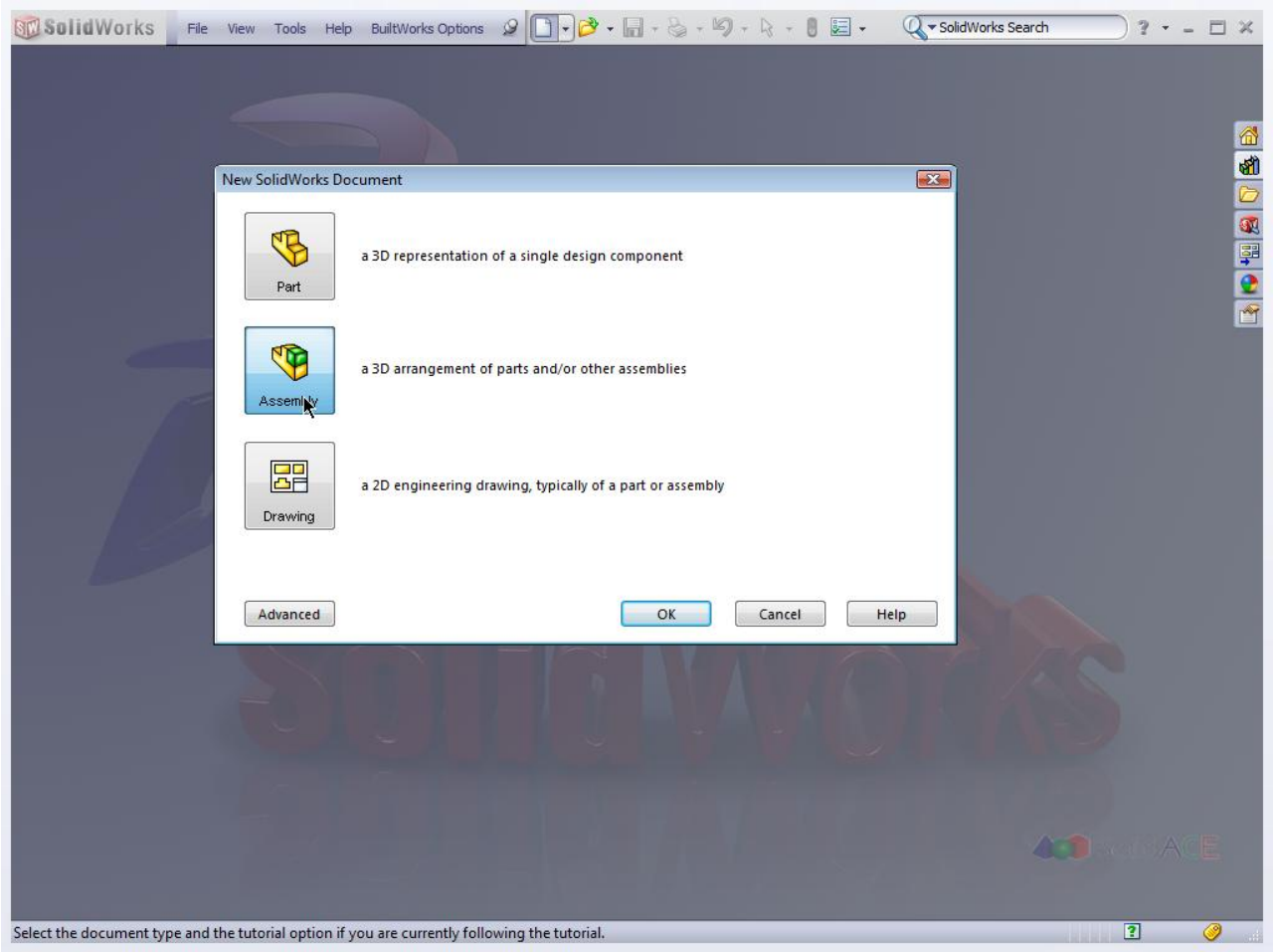

Fig. 2 Creating a new Assembly document

3. **Save a new Assembly document** before continuing - click **Save** (Standard toolbar).
4. Enter a file name **BW_Manual_1** in field **File name** and click **Save**.

II. Creating Grid System

To have a reference for your future structure you need to have a system of sketch lines. BuiltWorks provides a tool to create the parametric reference Grid System according to structural rules.

1. To create a structural grid click the **Grid System** button (BuiltWorks toolbar).

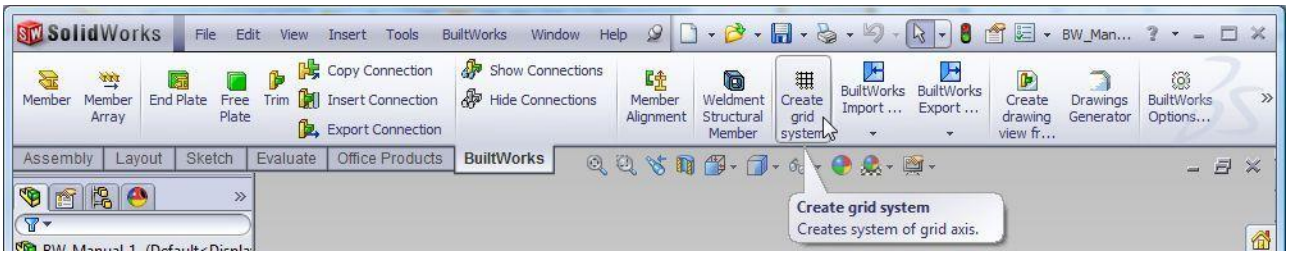

Fig. 3 Start creating Grid Lines

2. Choose **Linear** type of grid system in **Segment Parameters** block, and define the parameters:
   a. For upward direction Grid Lines define **1** step in **6000** mm,
   b. For sideward direction Grid Lines define **1** step in **6000** mm.
   c. In **Grid Levels** field define floors of the structure - **1** step in **8000** mm.

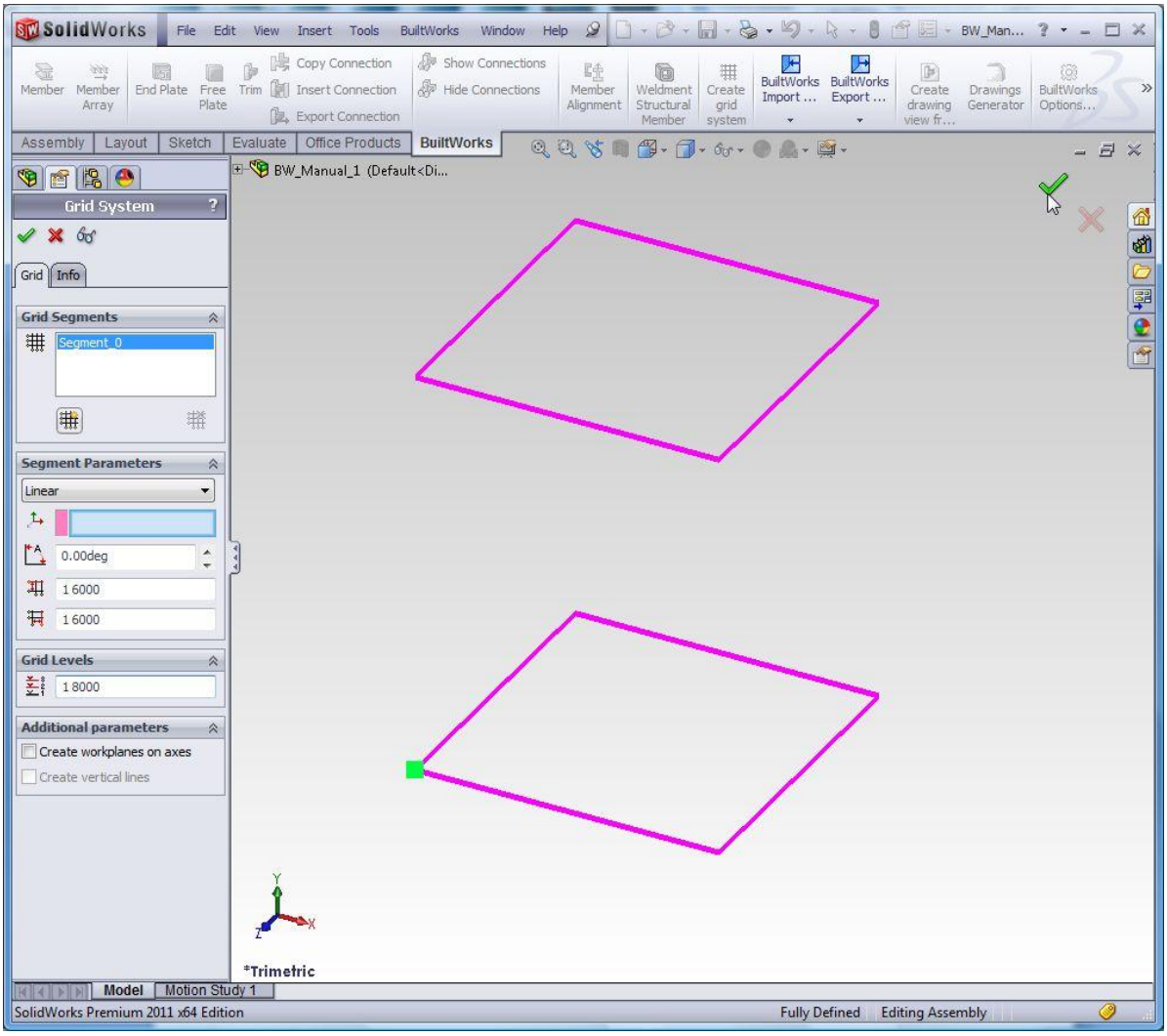

Fig. 4 Entering parameters for segments of Grid System

Note: 1st number in parametric field represents the count of steps, and 2nd – dimension in defined units of the step. There can be several steps with different dimensions in any direction. Parameters in this case must be separated with semicolon, e.g. **[1 6000; 2 3000; 1 1500]**, etc.)

3. Close dialog box by clicking OK button. Grid lines will be created.

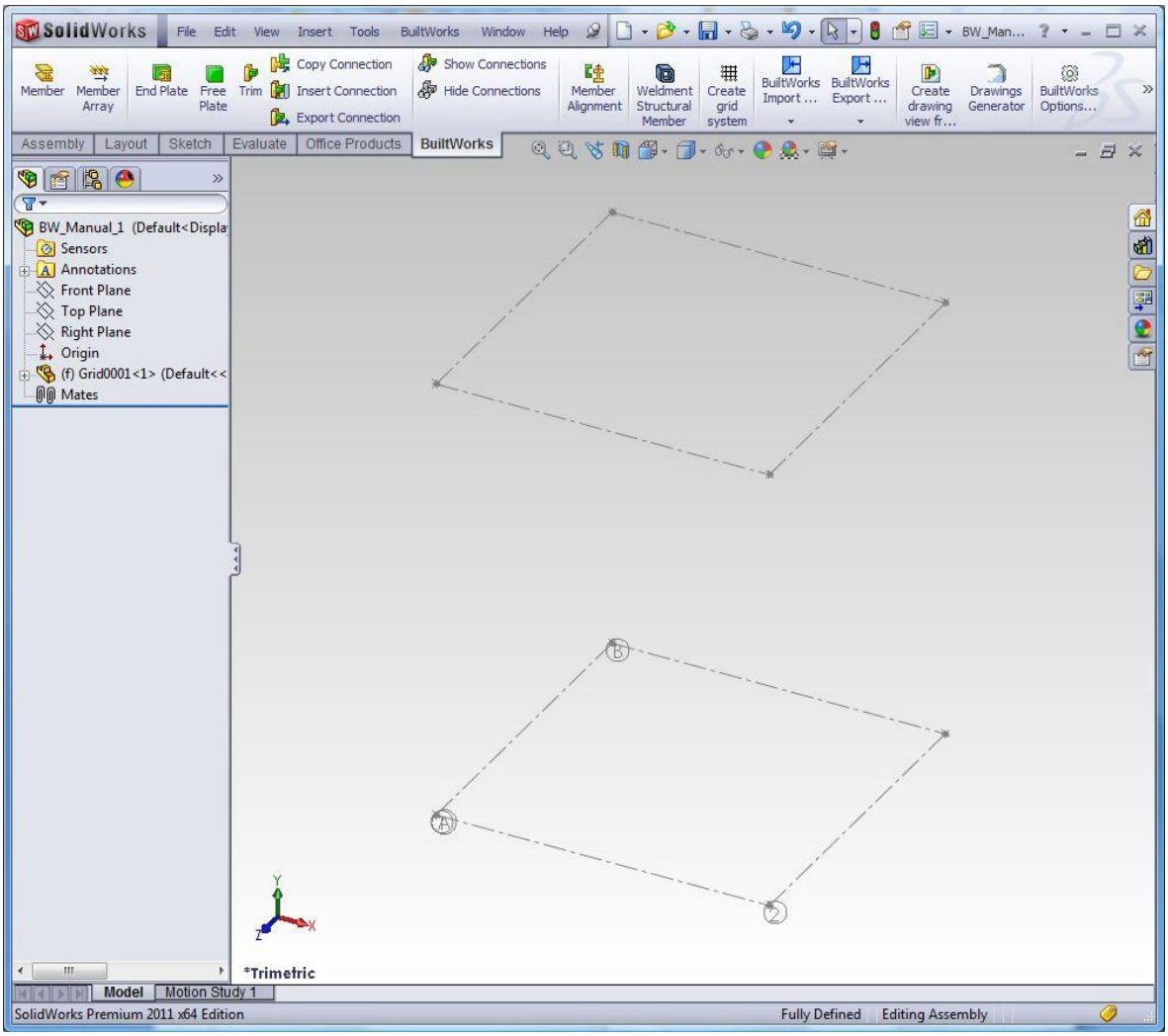

Fig. 5 Grid System – Final result

III. Creating Member Group (columns) between two Sketch Points

There are no special rules what type of structural members (columns, beams, bracings, etc.) shall be created first. For the sake of clarity and spatial understanding of the future structure you first will create columns using a steel profile from a Database of international European (ISO) profiles.

Columns will be placed in Assembly mode using earlier created Grid System. Each member will be automatically saved as a separate Part Document within the Assembly (no user interaction will be needed for that).

Members can be created one-by-one (Single Member) or in groups (Member Group). Grouping the similar members is beneficial for later editing of parameters of all group members at once in a single dialog.

In this step you will create members by selecting Sketch Points on a Grid System. Points may not be connected with sketch segments. New member will be placed between two selected points.

1. Click **Member** button (BuiltWorks toolbar) to create a single column member.

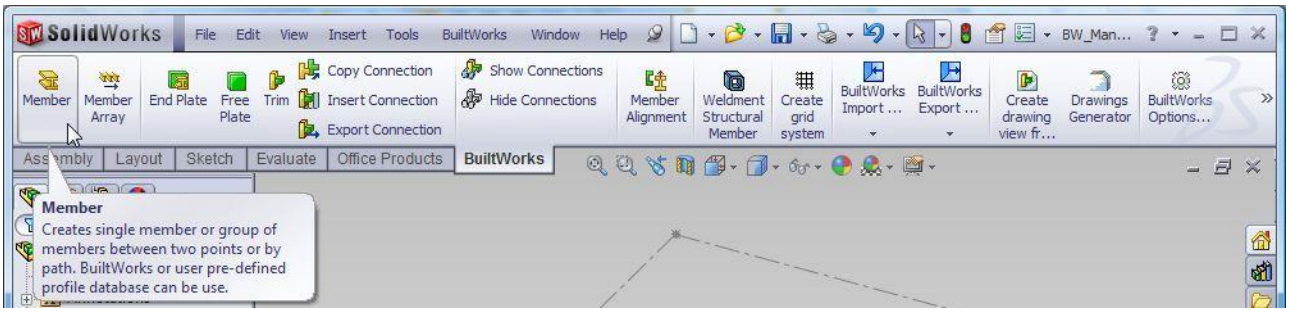

Fig. 6 Start creating Member

2. To create Member Group click on **Create Member Group** in **Method of Creation** block.

Fig. 7 Member Group creation

3. In field **Member Profile** select **Database**. From steel sections database select:

European *> I Shapes > HEA (IPBL) >* ***HE240A***

4. In the **Member Orientation** preview window select central base point.

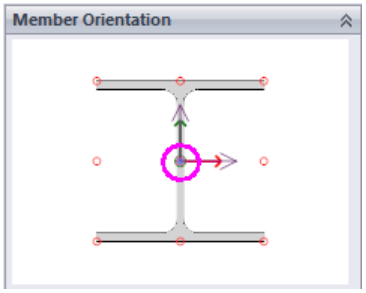

5. Select point on the **intersection** of ***1*** and ***A*** grid lines at the **bottom grid level**, and then the corresponding point at the **top grid level**.

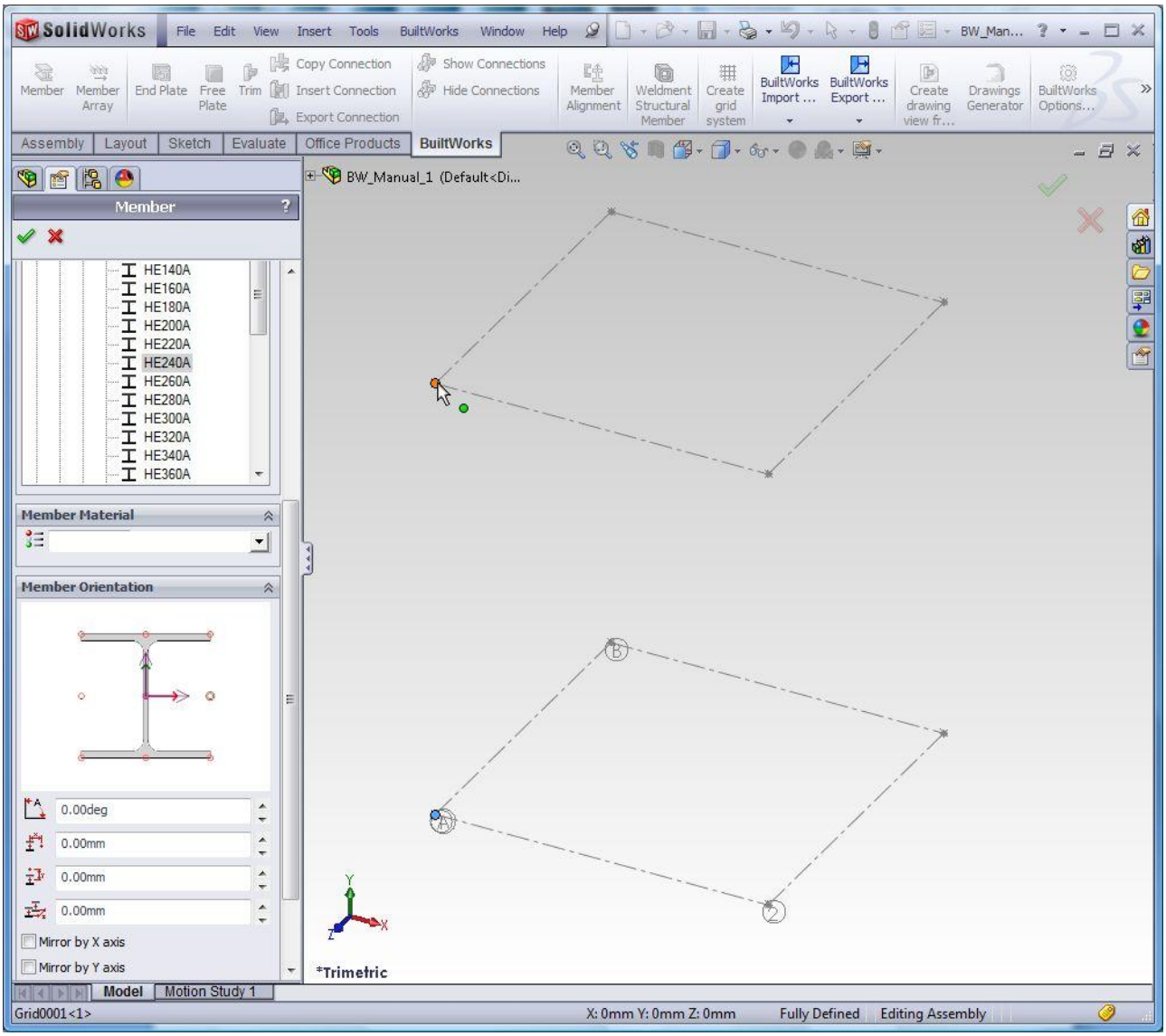

Fig. 8 Choose Member Profile, define Profile Base Point, and select grid points for placing members

6. HE240A column member preview will be displayed. **Not leaving the Member Group dialog repeat placing columns** of the same group around the square of the grid lines (lower, then upper level on B1, B2, A2 intersections).

7. When all 4 columns are prepared for placing, close dialog box by clicking the **OK** button.

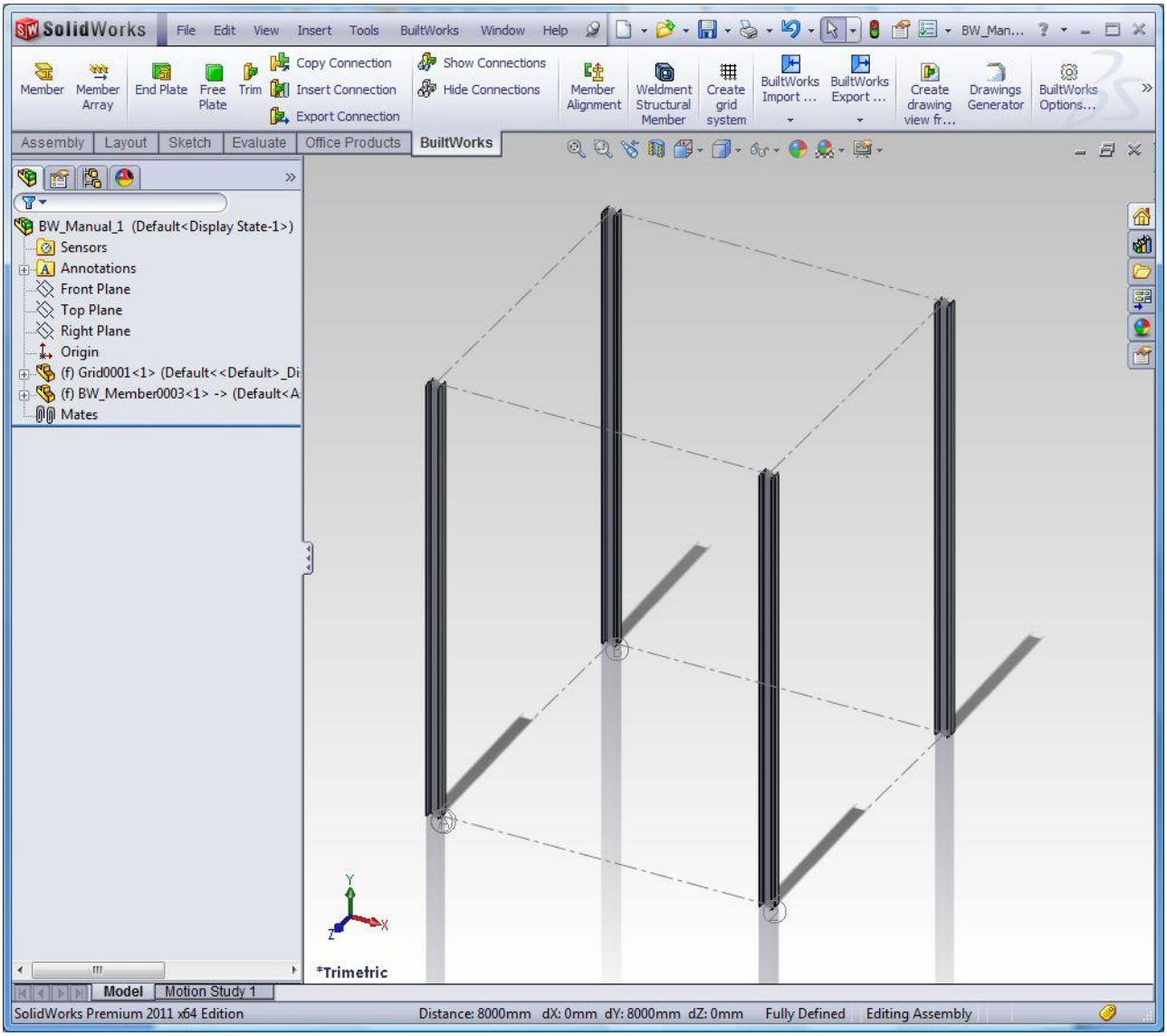

Fig. 9 Member Group of columns by Sketch Points – Final result

IV. Creating Member Group (beams) on selected Sketch Segments

In this step you will create another Member Group of main beams. Members will be placed by selecting Sketch Segments on a Grid System – new member will be placed along the whole segment as it is drawn.

1. Click **Member** button (BuiltWorks toolbar), to create the main beam member group click on **Member Group** button (Method of Creation block).
2. In field **Member Profile** select **Database**. From steel sections database select:

   European > *I Shape* > *IPE* > *IPE* > ***IPE270***

3. In **Member Orientation** preview window select top central base point.

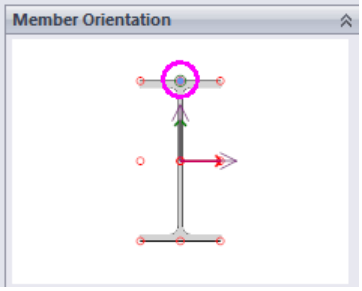

4. Select **sketch segment** on ***A*** grid line at **top level**. Beam member will be displayed ready for being created. Not leaving the Member Group dialog select **sketch segment** on ***B*** grid line at **top level**.

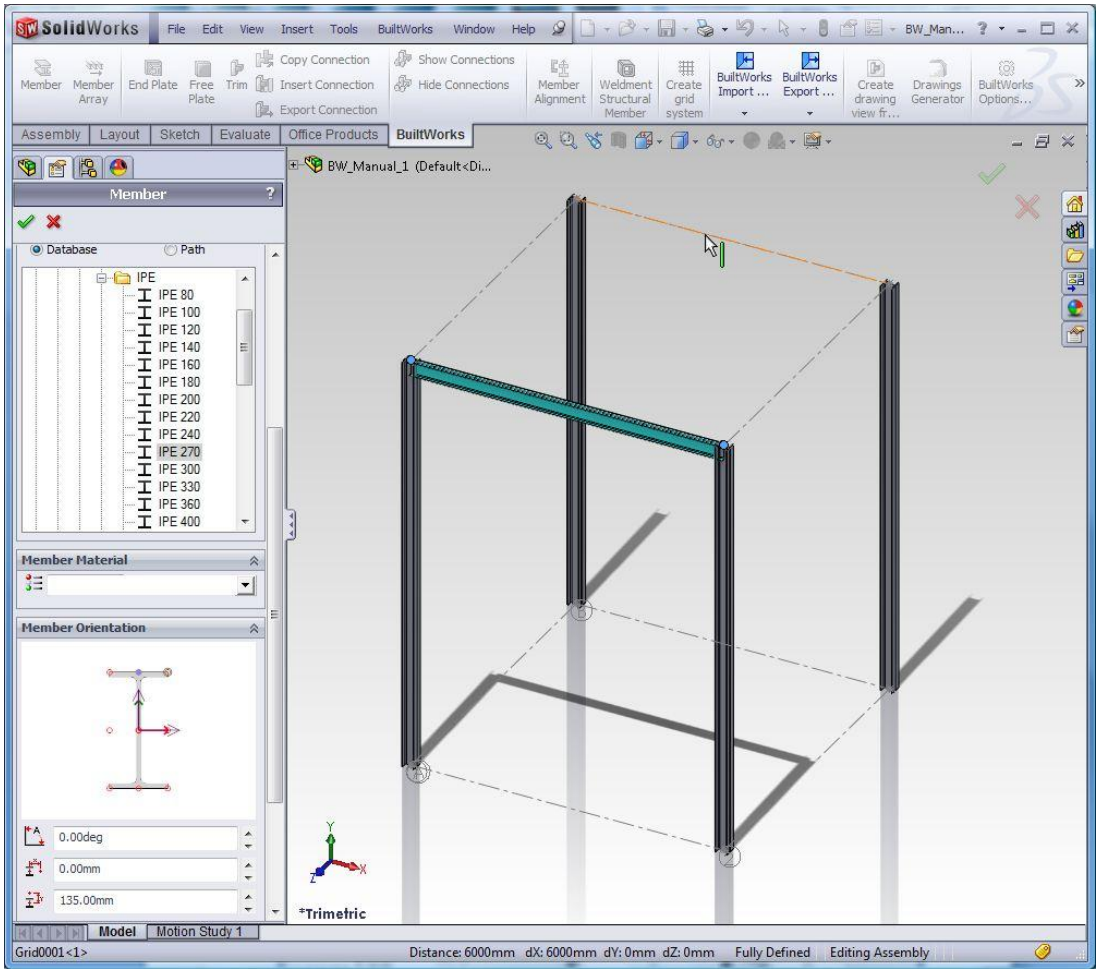

Fig. 10 Choose Member Profile, define Profile Base Point, and select Sketch Segments

5. When all both beams are prepared for placing, close dialog box by clicking the **OK** button.

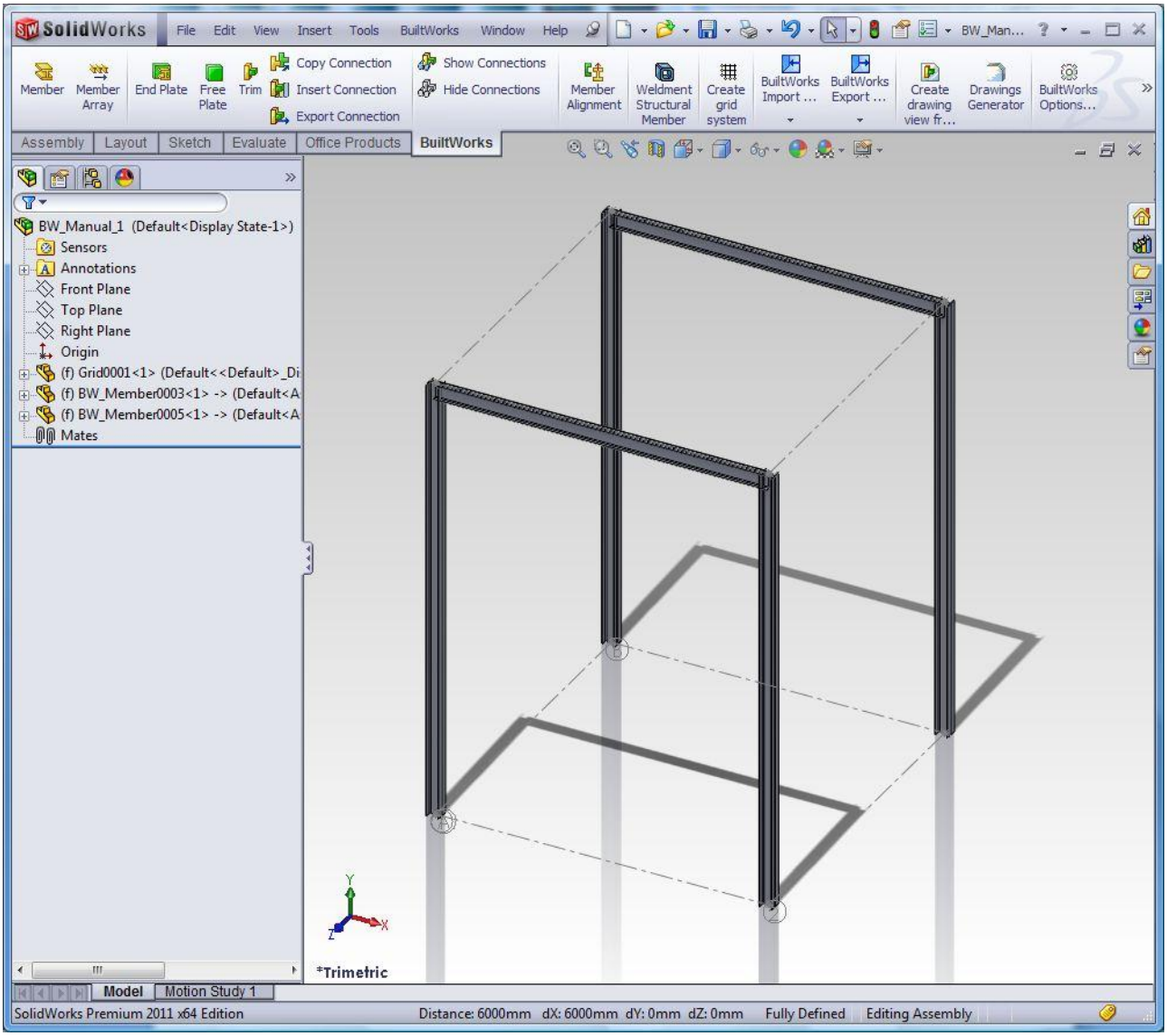

Fig. 11 Member Group of main beams by Sketch Segments – Final result

V. Creating Member Array (secondary beams)

In this step you will create different kind of group of members – Member Array of secondary beams. Array function creates multiple members with a single procedure. The parameters of all members of Array can be edited later at once.

1. Click **Member Array** button (BuiltWorks toolbar) to create the secondary beam array.

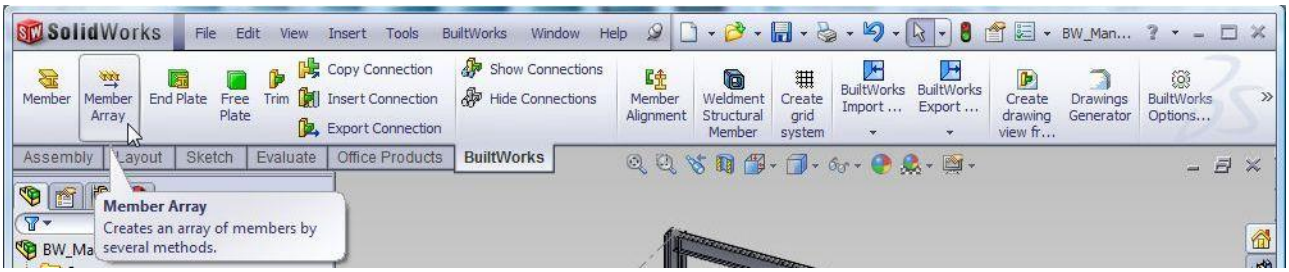

Fig. 12 Creation of Member Array

2. In field **Member Profile** select **Database**. From steel sections database select:

   European > *I Shape* > *IPE* > *IPE* > ***IPE240***

3. In the **Member Orientation** preview window, select **bottom central** base point.
4. Choose placement method **By Count** (Parameters field) and enter **number** of secondary beams (**4**).
5. Select **Create start member** and **Create end member** options.
6. Select sketch elements on **A** and then on **B** grid lines at **top level**.

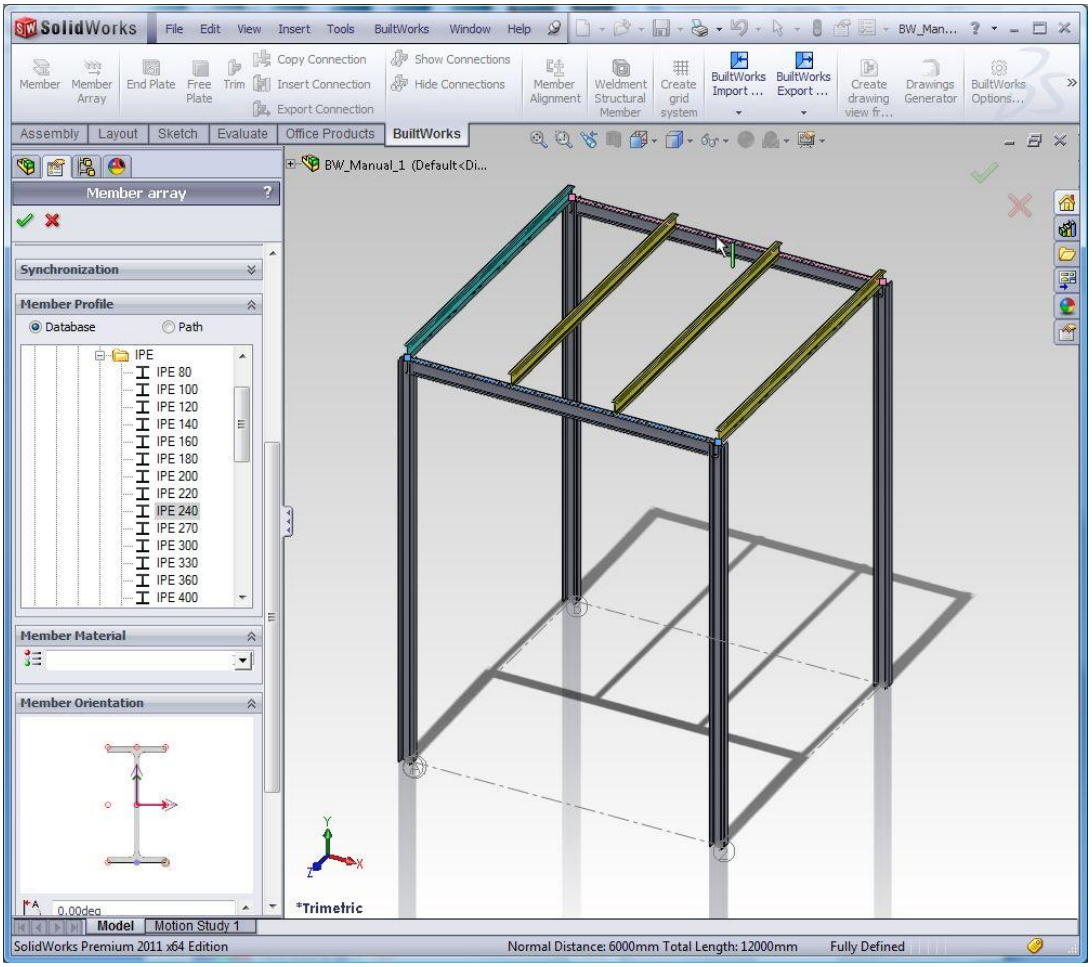

Fig. 13 Choose Member Profile, enter Number of secondary beams and select sketch segments

7. Secondary beams array will be created. Close dialog box by clicking the **OK** button.

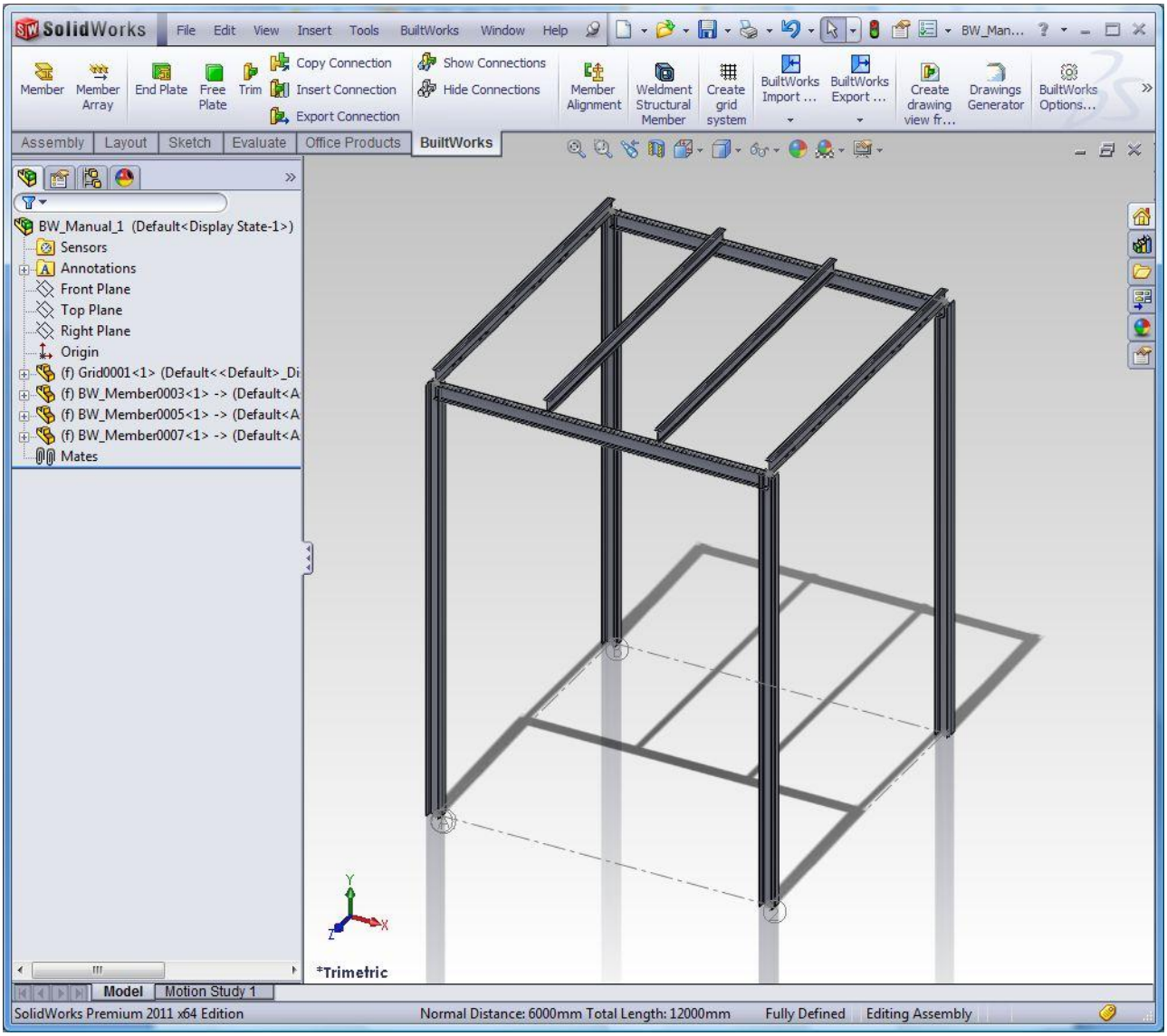

Fig. 14 Member Array (secondary beams) – Final result

VI. Exporting model to Structural Analysis program (STAAD.Pro)

Created structure must be analyzed to prove the sufficient strength. Steel structures are best analyzed with special Structural Analysis programs that use Design Code check based methods for analysis.

BuiltWorks provides a link between various Structural Analysis applications. In this step we will export model data with the pre-defined parameters for analysis to Structural Analysis application STAAD.Pro. With STAAD.Pro BuiltWorks has the bi-directional link, which means that after analysis, the results can be brought back to SolidWorks by allowing users to automatically update the model according to the results of the analysis.

1. You can configure your default analysis program, and the default export parameters in **BuiltWorks Options** dialog, **Export / Import** tab.

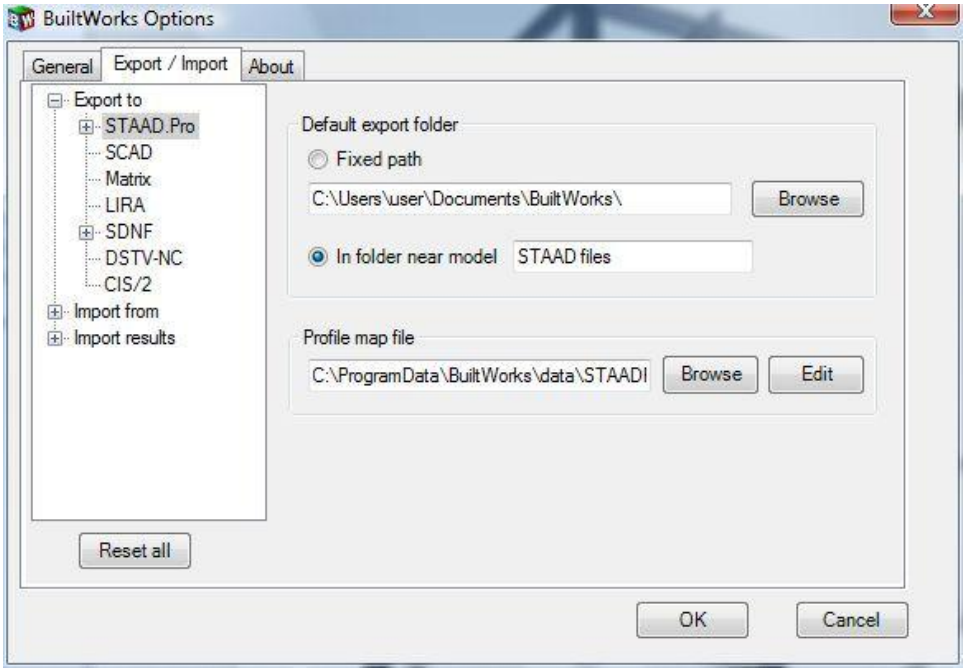

Fig. 15 BuiltWorks Options for Export/Import

2. To export model to Structural Analysis application click **BuiltWorks Export… > Export to Analysis** button (BuiltWorks toolbar).

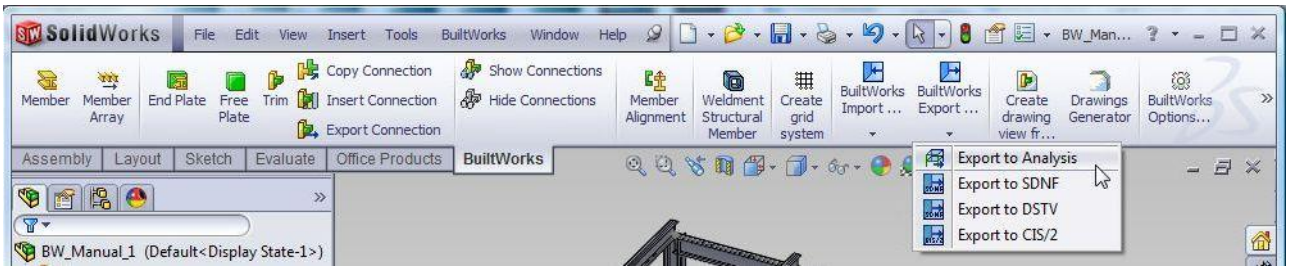

Fig. 16 Start exporting the model to Analysis application

3. Define the parameters for analysis in STAAD.Pro:
   a. In the **Export Data** field select Object type **BW objects**, chose to **Export all geometries** and also select **Export offsets** option.
   b. In **Geometry parameters** field set units to **METER**. Leave option Create groups by section unselected.
   c. In **Design parameters** field select desired design code (**EC3**) and also select **Create unification groups**, **CHECK** and **SELECT** parameters, enter a number of iterations for analysis (**1**).

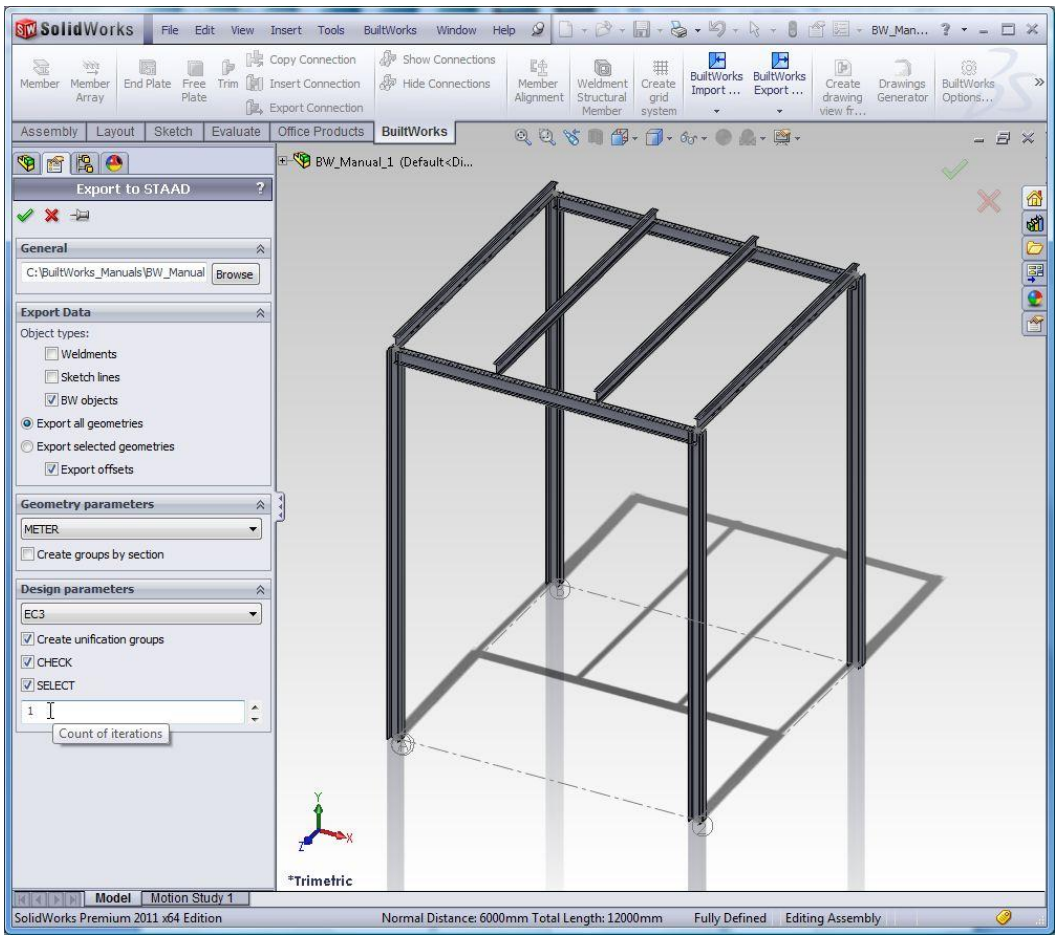

Fig. 17 Export to Analysis Panel

4. After clicking **OK** button the export file will be created. You will be prompted if you want to open the export file for analysis.

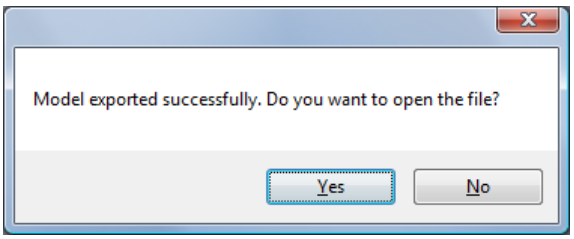

5. If you have **STAAD.Pro** installed in your system, choose [Yes] to open the file, and the application will be started automatically opening the exported model.

Note: If you **don't have STAAD.Pro installed** on your computer, you may choose not to open the analysis file. In this case **please skip next Chapter** of this manual and continue from **Chapter "VIII. Importing analysis results from STAAD.Pro"**

VII. Analyzing the model in STAAD.Pro

This Chapter is dedicated to the methods of performing the Structural Analysis of the created model in STAAD.Pro

NOTE: In order to complete this step **you must have STAAD.Pro** installed in your system and have some basic knowledge of this system and structural analysis methods. If you don't have STAAD.Pro installed on your system, please skip this step and continue from **the Chapter "VIII. Importing analysis results from STAAD.Pro"**.

1. If you chose to open the analysis file in previous step, the model will be opened in STAAD.Pro

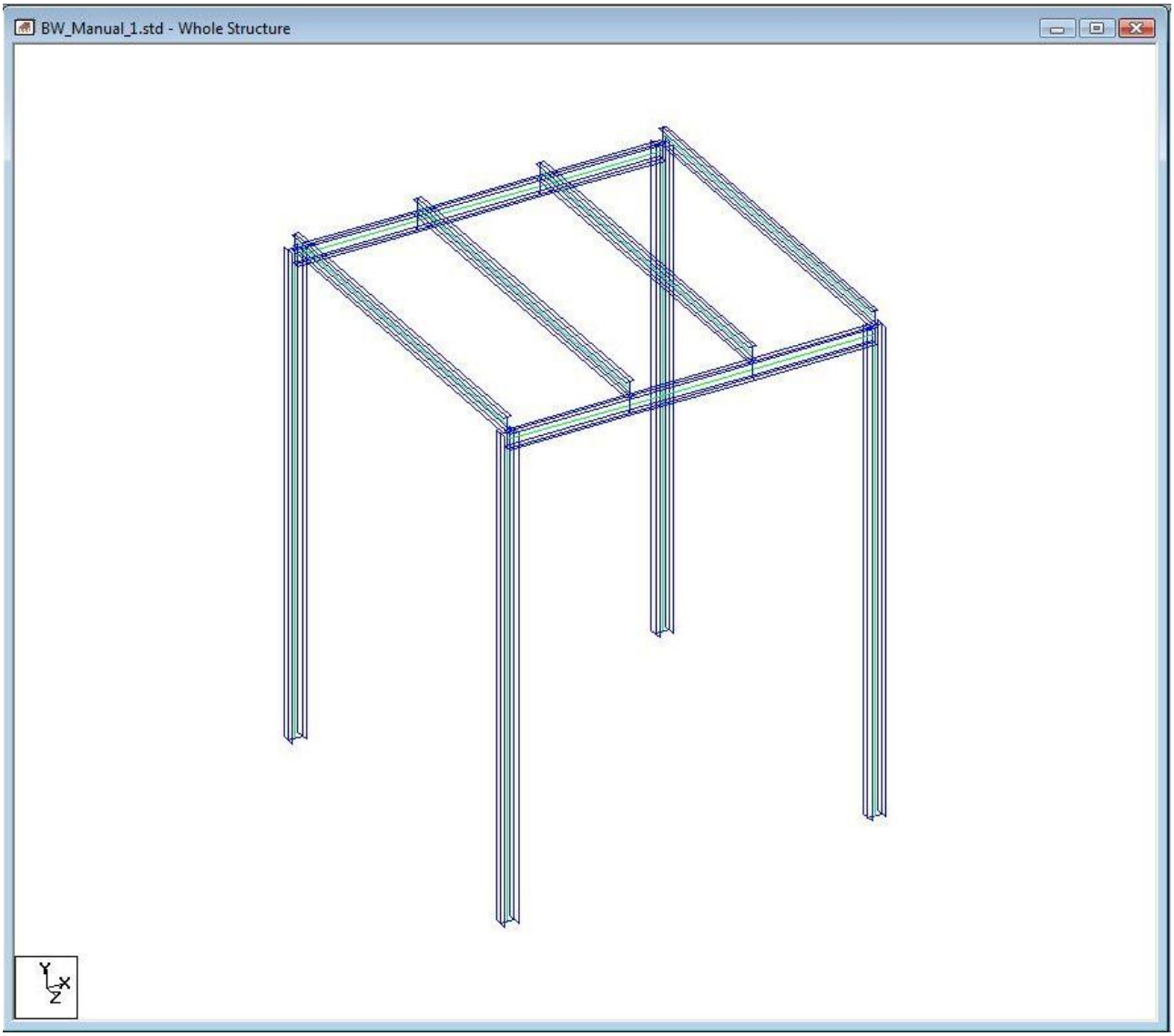

Fig. 18 Model opened in STAAD.Pro

2. To perform the analysis of your structure you will have to:
   a. Assign support for columns – open Support Page, create new support and choose Fixed support type; use cursor to select basements of the columns assigning the fixed support for each.

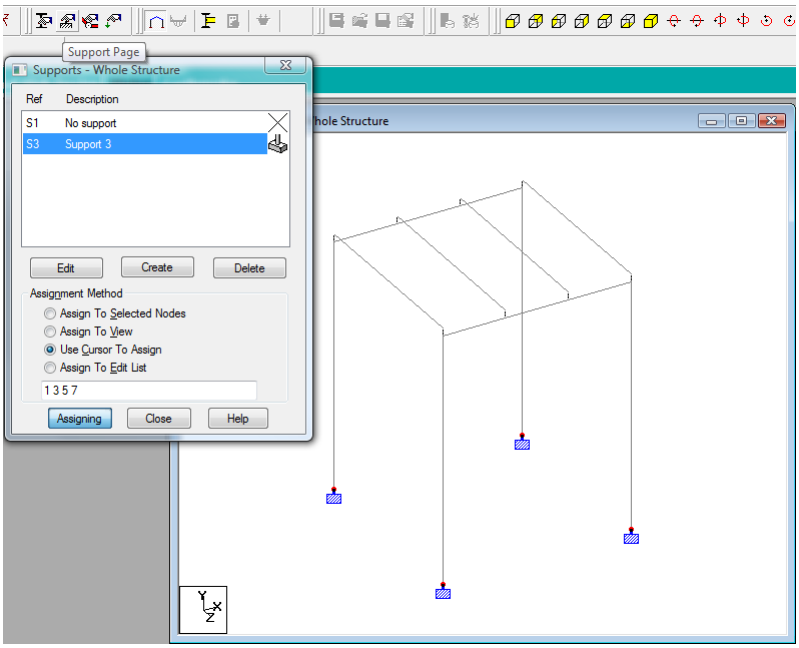

Fig. 19 Assigning fixed supports to columns

   b. define the loads on secondary beams – create new Load Case for self weight, Uniform Force load of -15 kN/m for all secondary beams and -20 kN Concentrated Force load in the middle of the span (at position of 3 m) for start and end secondary beams.

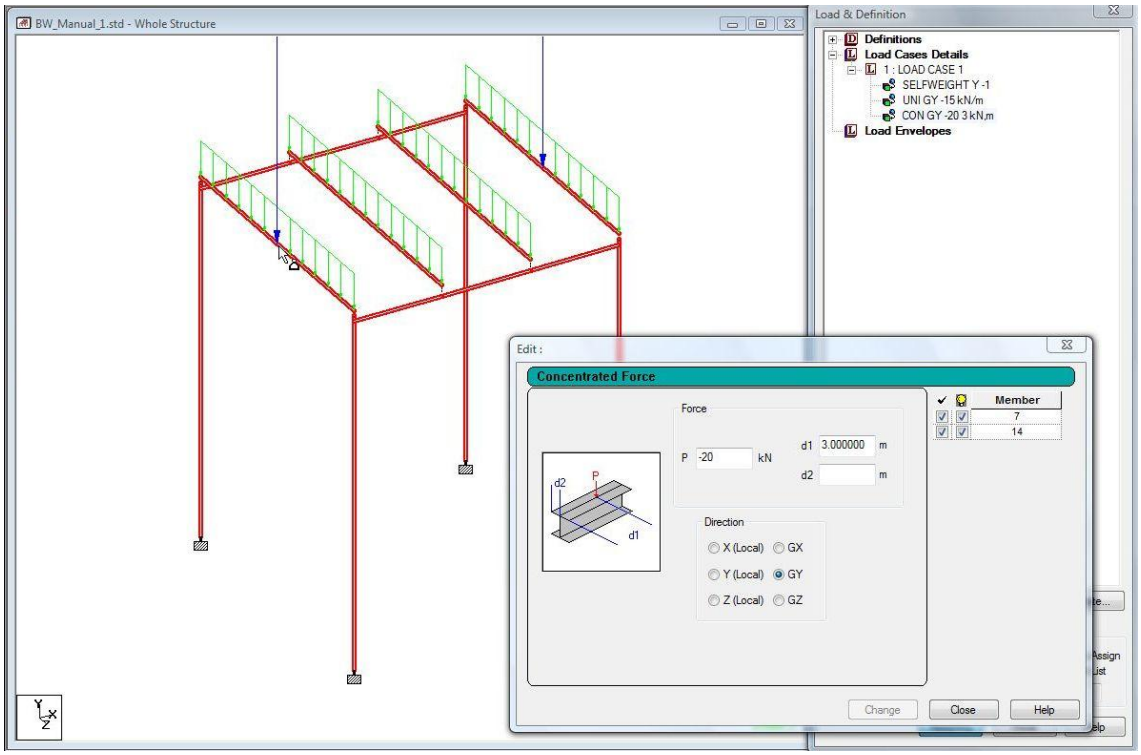

Fig. 20 Defining loads on secondary beams

3. Run analysis.

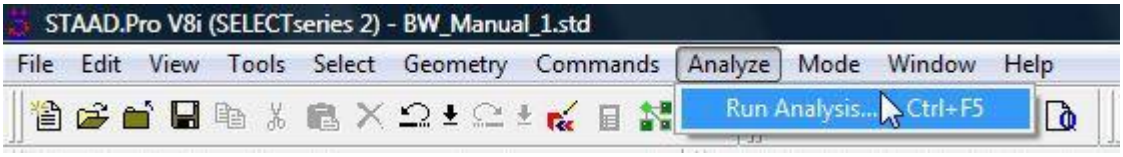

Fig. 21 Run STAAD.Pro analysis

4. As a result of analysis new sections of structure elements will be selected.

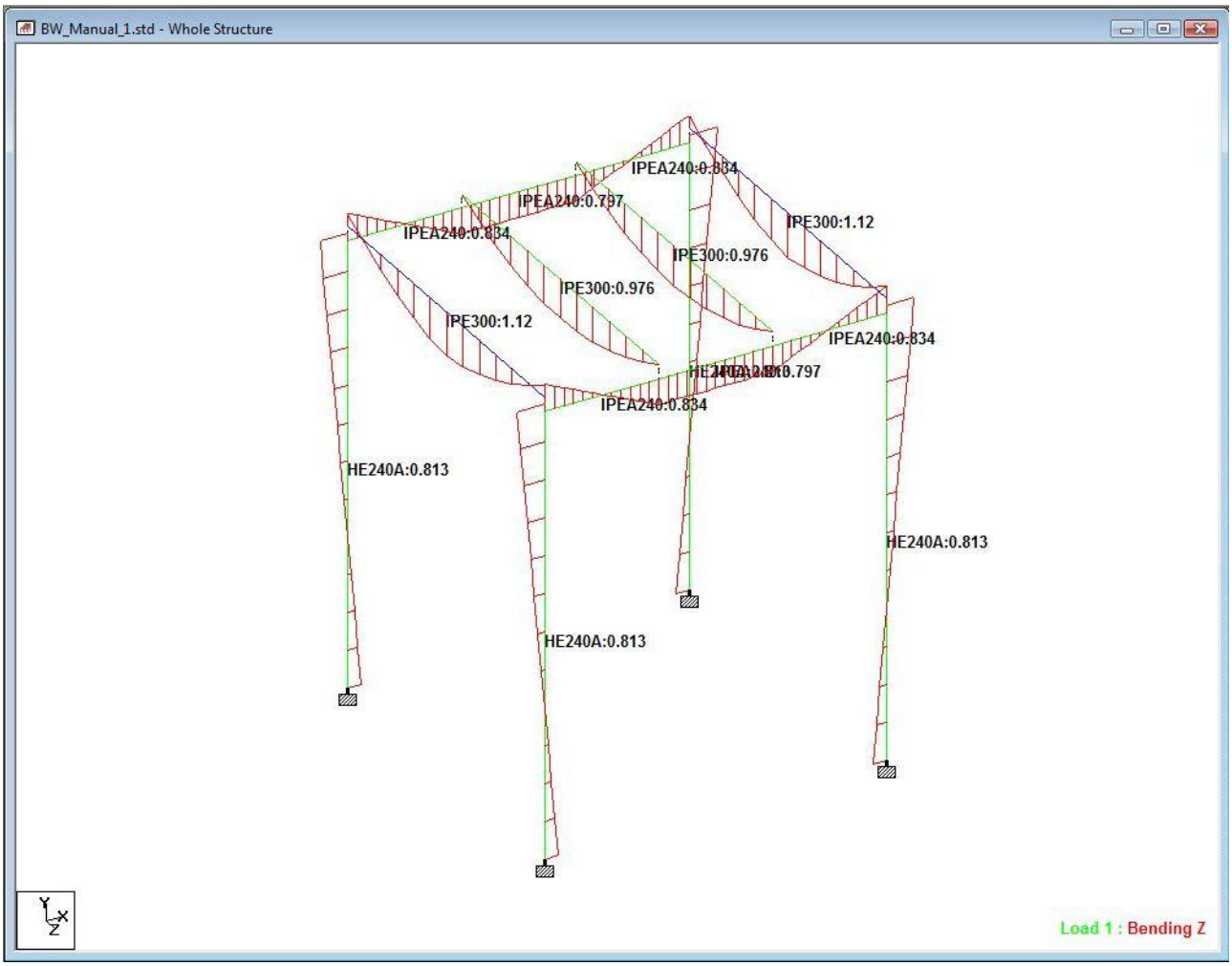

Fig. 22 Analysis results

BW_Manual_1.std - Design Results:-

All / Failed Members

Beam	Analysis Property	Design Property	L/C	Ax cm2	Iz cm4	Iy cm4	Ix cm4
1	HE240A	HE240A	1	76.800	7763.001	2769.000	41.600
2	HE240A	HE240A	1	76.800	7763.001	2769.000	41.600
3	HE240A	HE240A	1	76.800	7763.001	2769.000	41.600
4	HE240A	HE240A	1	76.800	7763.001	2769.000	41.600
5	IPE270	IPEA240	1	33.300	3290.001	240.000	8.400
6	IPE270	IPEA240	1	33.300	3290.001	240.000	8.400
7	IPE240	IPE300	1	53.800	8356.001	604.000	20.100
8	IPE240	IPE300	1	53.800	8356.001	604.000	20.100
9	IPE270	IPEA240	1	33.300	3290.001	240.000	8.400
10	IPE270	IPEA240	1	33.300	3290.001	240.000	8.400
11	IPE240	IPE300	1	53.800	8356.001	604.000	20.100
12	IPE270	IPEA240	1	33.300	3290.001	240.000	8.400
13	IPE270	IPEA240	1	33.300	3290.001	240.000	8.400
14	IPE240	IPE300	1	53.800	8356.001	604.000	20.100

Fig. 23 Design results

5. Click **Result > Update Properties** button. Save file (you may also want to save results with different project name, e.g. "*BW_Manual_1_results*") and close **STAAD.Pro**.

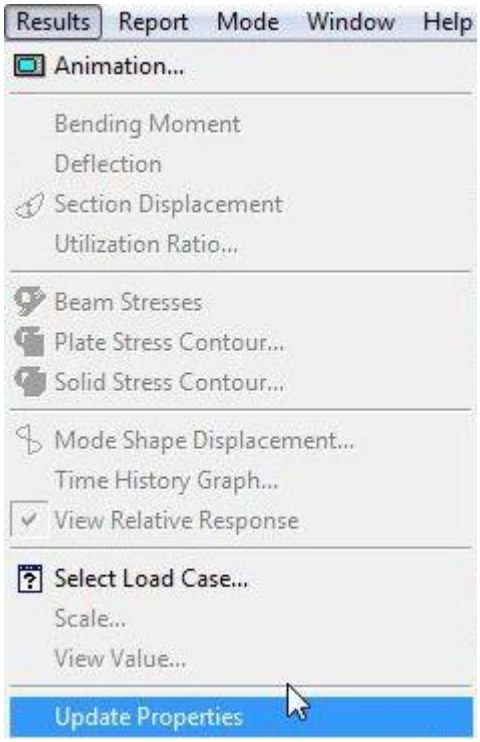

Fig. 24 Update properties

VIII. Importing analysis results from STAAD.Pro

In this step the analysis results are being imported from STAAD.Pro back to SolidWorks automatically updating the model with the members' information that has changed during the analysis process.

NOTE 1: If you don't have STAAD.Pro installed on your system and you skipped previous step, you may import as analysis results the resulting file (**BW_Manual_1_results.std**), provided with this tutorial.
NOTE 2: STAAD.Pro should be closed before importing analysis result file.

1. For analysis results import click **BuiltWorks Import…** > **Import Analysis Result** button (BuiltWorks toolbar).

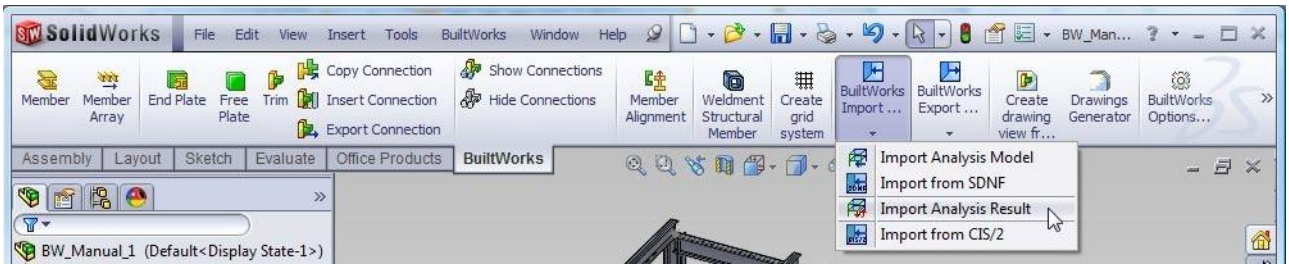

Fig. 25 Start importing Analysis Results

2. Select analysis file and click **OK** ✔ .

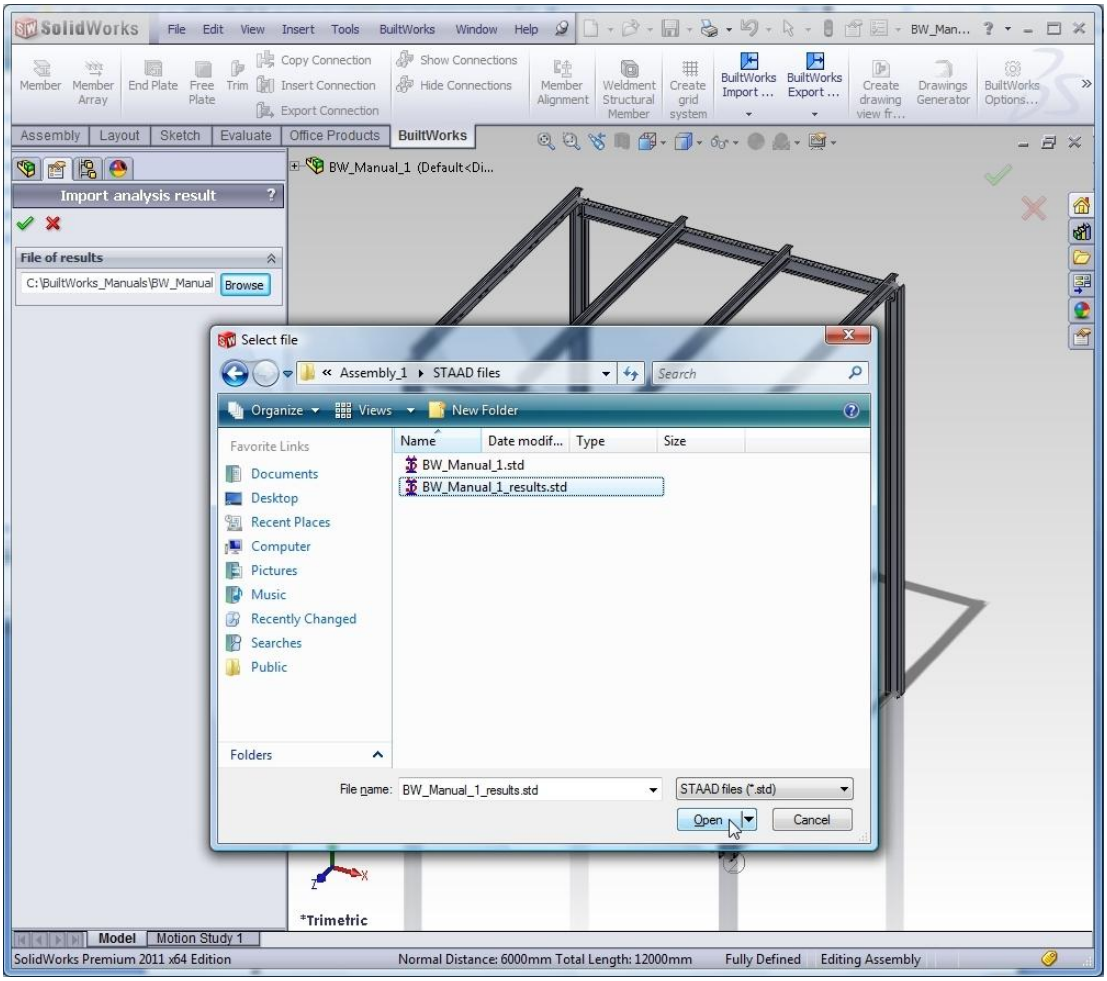

Fig. 26 Select the resulting Analysis file for import

3. In the **Import Analysis Results** dialog box choose grouping mode **By Designed Section** and note the sections that are changed comparing to the initial model. Select those members which have changed profile names in Designed Section column, uncheck those, which were not changed. To automatically update changed members click **Update**.

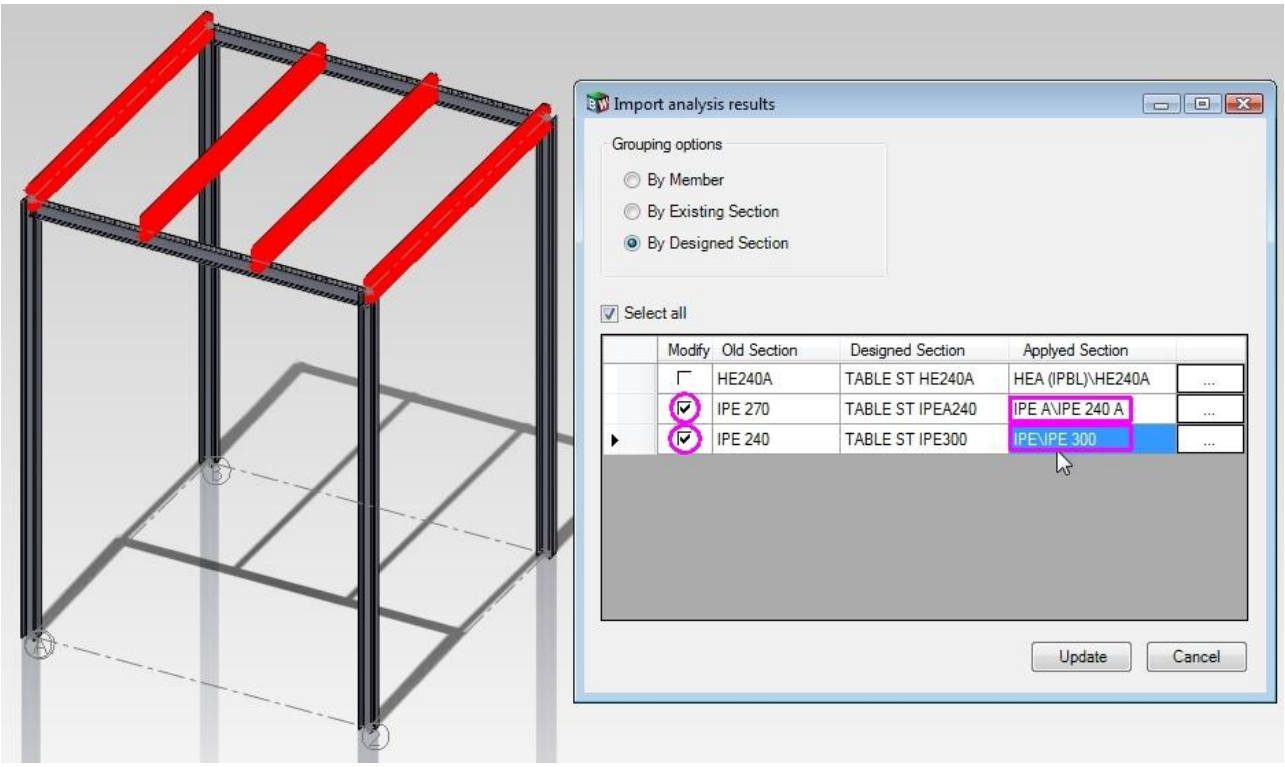

Fig. 27 Updating member profiles, changed after analysis

4. BuiltWorks updates chosen members and generates the report message of how many elements were analyzed and how many were changed. Press **OK** to dismiss the message.

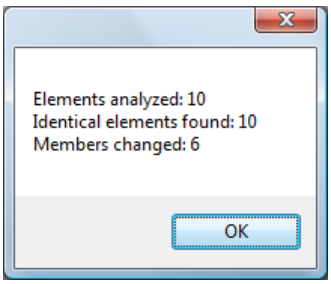

Fig. 28 Updating Report

IX. Aligning Members

In previous step the profiles of main beams and array of secondary beams has been changed because of the proposed changes from analysis results. Therefore the orientation of beams has been displaced. To fix the locations of beams you will need to use Member Alignment command.

1. To start alignment of members procedure click **Member Alignment** button (BuiltWorks toolbar).

Fig. 29 Start Member Alignment

2. In the **Alignment** dialog box choose **Align type** – **By offset** (members will be only moved).
3. When field **Align to** (blue) is highlighted, select in a graphic window the face of the top of column (**Align to** field is updated and the highlight is changed to the field **Object to align**).
4. When field **Objects to align** (pink) is highlighted, in a graphic window select:
   a. Top face of one of main beams;
   b. Bottom face of one of secondary beams.

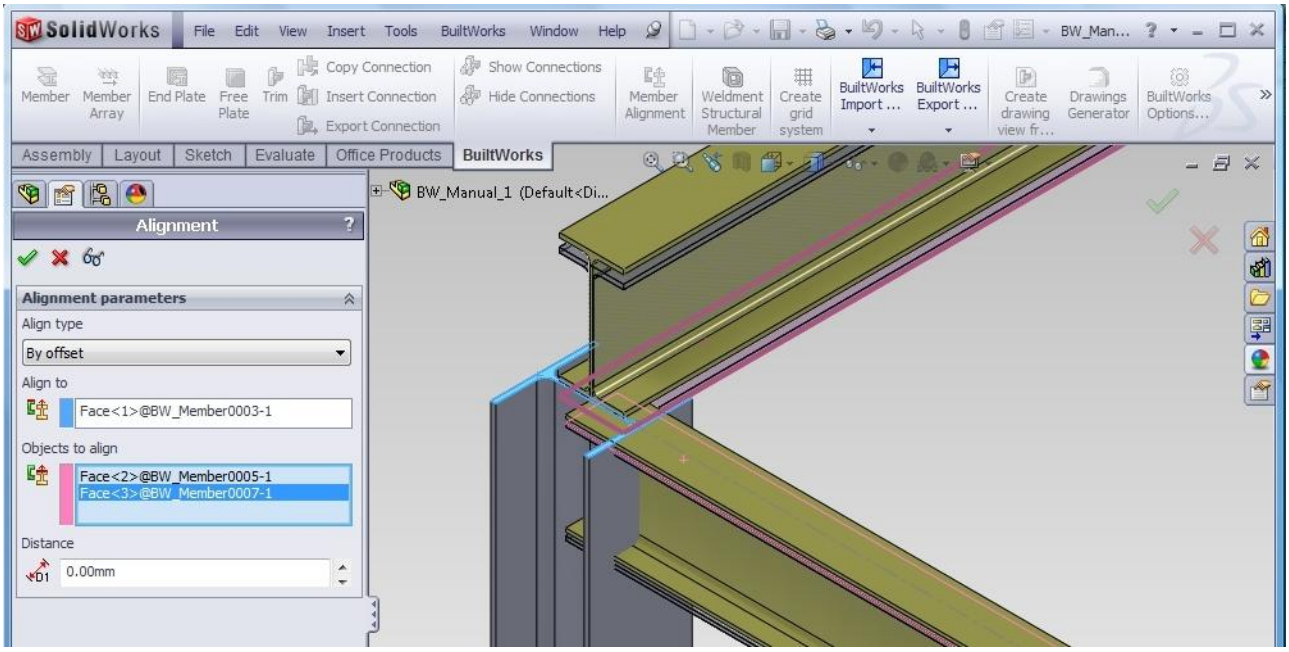

Fig. 30 Selecting faces of Members to be aligned to each other

5. Click **OK** ✔ in **Alignment** dialog. When function discovers that you are trying to align a **Member** that belongs to a **Group** or **Array** it will ask if you want to apply this alignment function to all Members of that feature. You may choose **Yes**, if you want that all Members of Group or Array be aligned, or you may choose **No**, if you want to align only the selected member. In this case we will choose to align all Members of the Array – click button Yes.

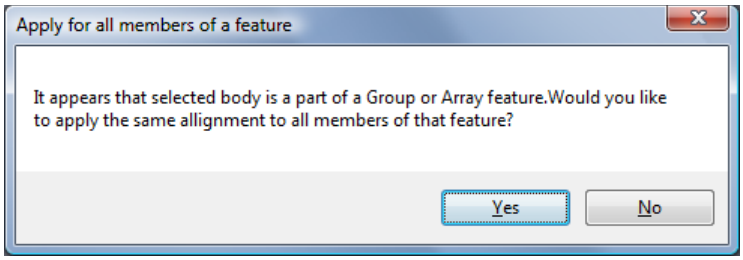

Fig. 31 Prompt to align all Members of Group or Array

6. After clicking Yes button in the prompt, all members will be aligned by the top of the column.

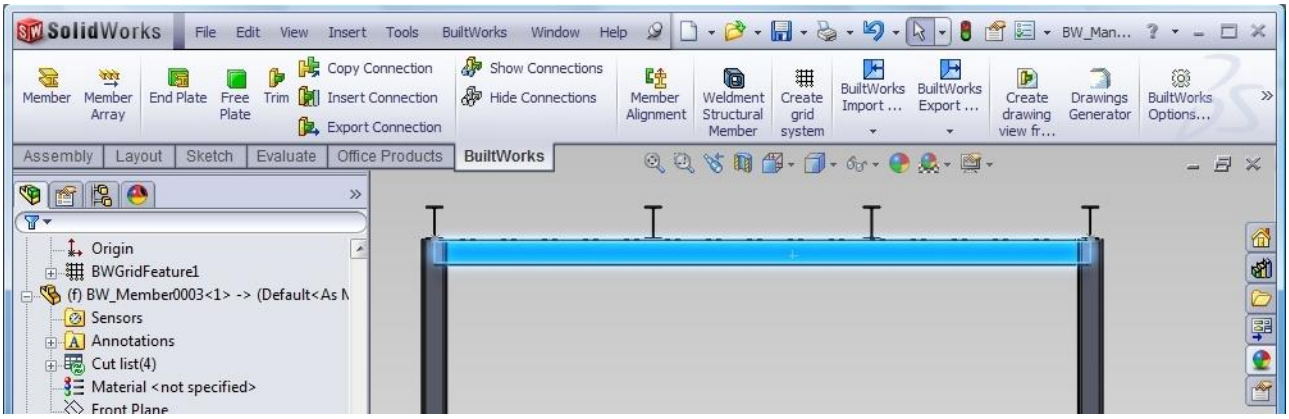

Fig. 32 Member Alignment – Final result

X. Detailing Connections – Trim

In this chapter you will perform the detailing of Connections by trimming intersecting members.

1. To trim intersecting members in the connection click **Trim** button (BuiltWorks toolbar).

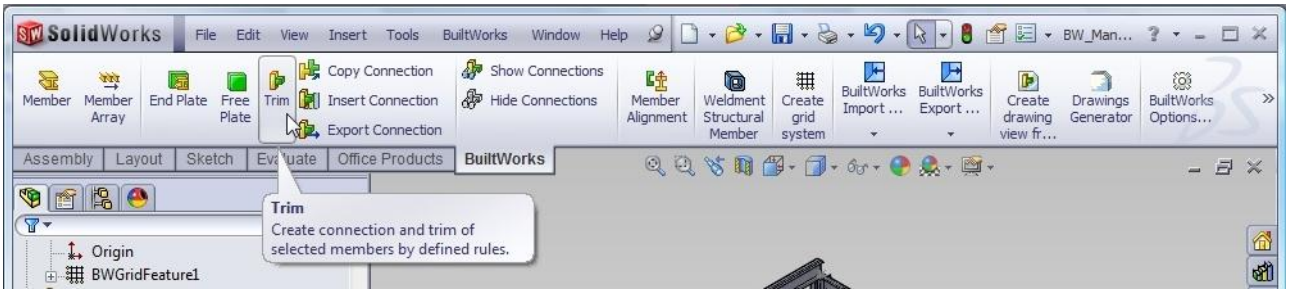

Fig. 33 Start Trimming Members

2. When field **Members of connection** in the **Connection** dialog box is highlighted, select Members in graphic window one-by-one in order of priority: i.e. first select Members, which will be trimming other members (in this case **first select Column**), and then others, which will be trimmed by earlier selected members (in this case **second select main Beam**).

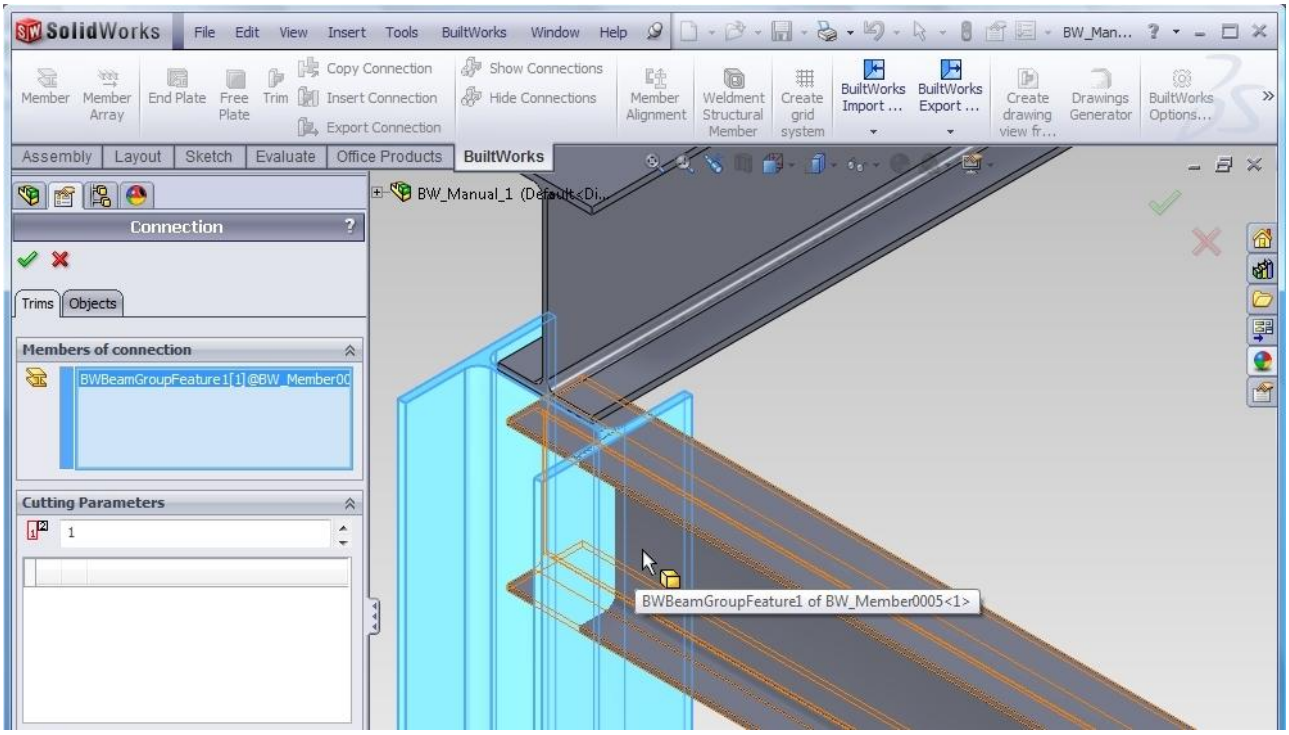

Fig. 34 Selecting members by priority for trimming

3. When both members are selected, click on 1st member in the field **Members of connection** and make sure, that it will be not cut by 2nd member (the Cutting Parameters for this member are marked with red cross – option "**None**" is selected).

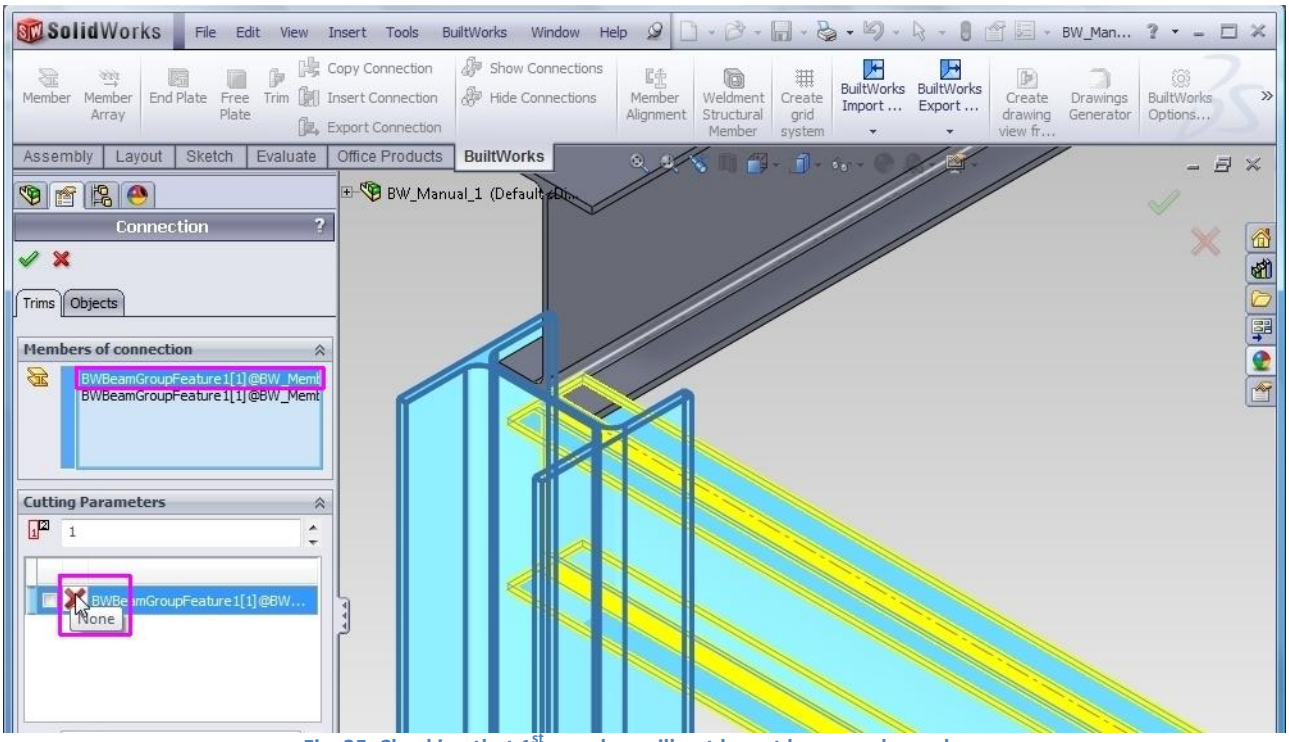

Fig. 35 Checking that 1st member will not be cut by second member

4. Click on 2nd member in the field **Members of connection** and in the field **Cutting Parameters** choose from drop down menu option **By normal** by clicking iconic button next to the name of 1st member – it will make 2nd member to be trimmed by 1st member at the right angle on the straight line (normal to) of the axis of 2nd member pointing to the axis of 1st member. Click **OK** ✔ . Beam member will be trimmed and BWConnection object will appear in the tree.

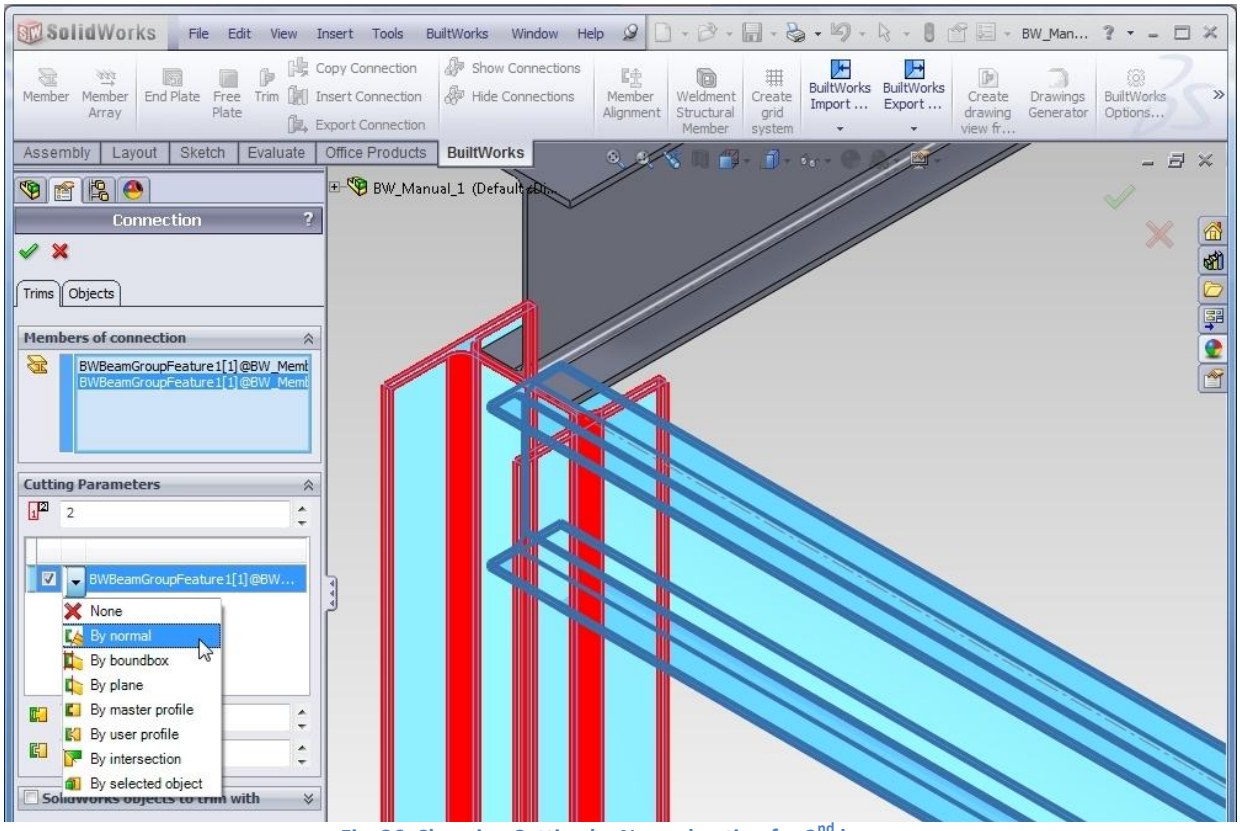

Fig. 36 Choosing Cutting by Normal option for 2nd beam

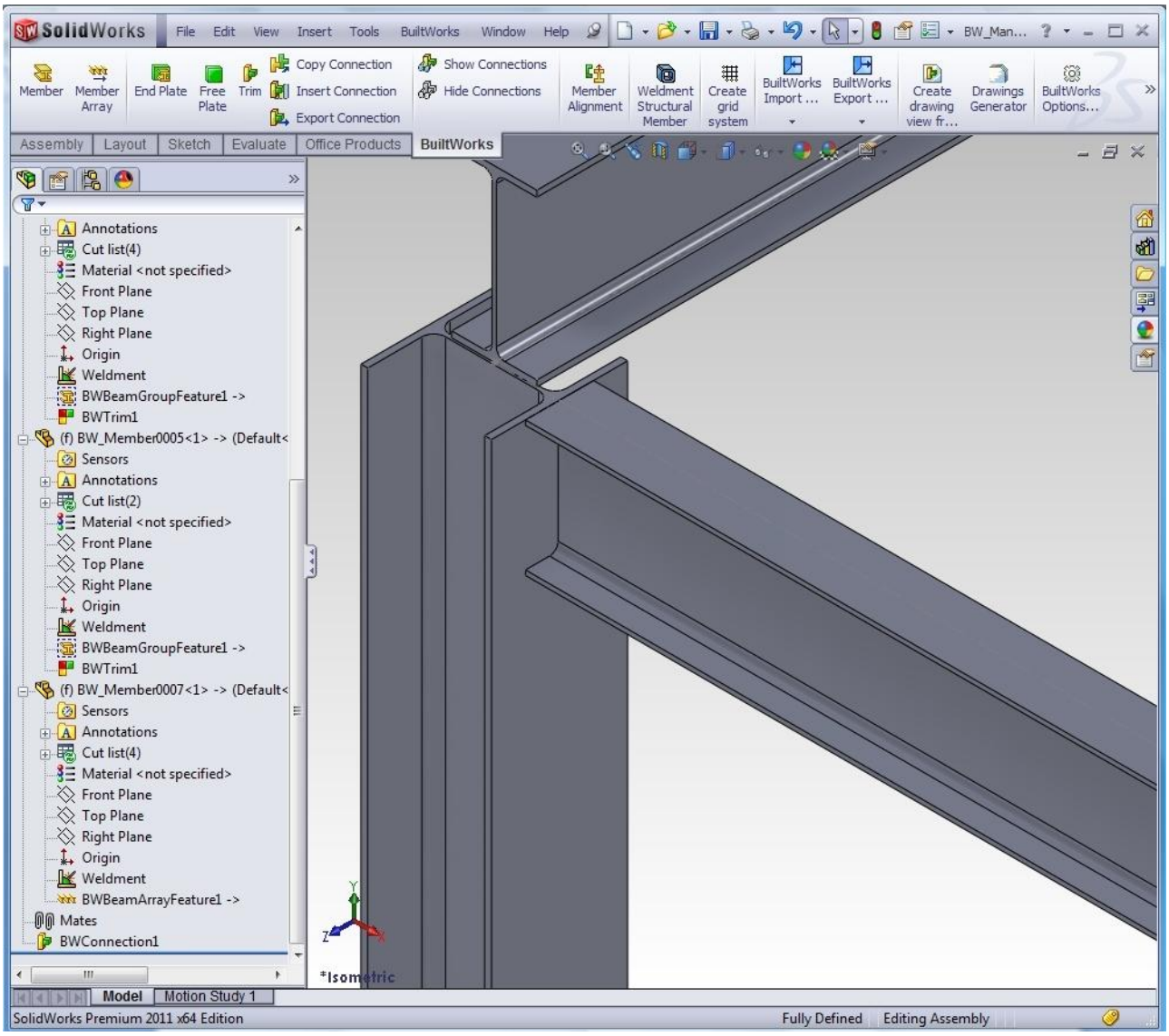

Fig. 37 Trimming the Beam – Final result

XI. Copying Connections

BuiltWorks provides Copy Connection functionality, which benefits to saving the time for connection detailing by copying the detailing rules from one connection to other places, where it can be applicable.

In this chapter you will copy trimming rules for Beam-to-Column connection, which was created in previous chapter, to all 3 remaining corners of the structure, where such Beam-to-Column connection is applicable. Before starting to Copy Connections, you need to select the existing connections in the model – connections are marked with functional Square Dot (Connection marker).

1. Click **Show Connections** button (BuiltWorks toolbar) to highlight the existing connections.

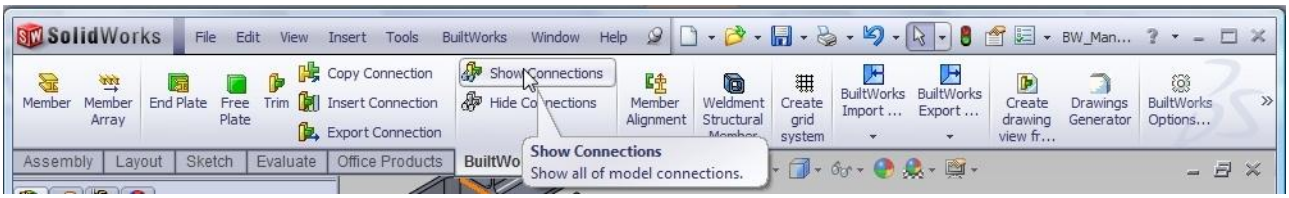

Fig. 38 Highlighting existing connections

2. In graphic window click on the blue dot, representing connection. From the appeared context menu next to the cursor click on **Copy Connection** button.

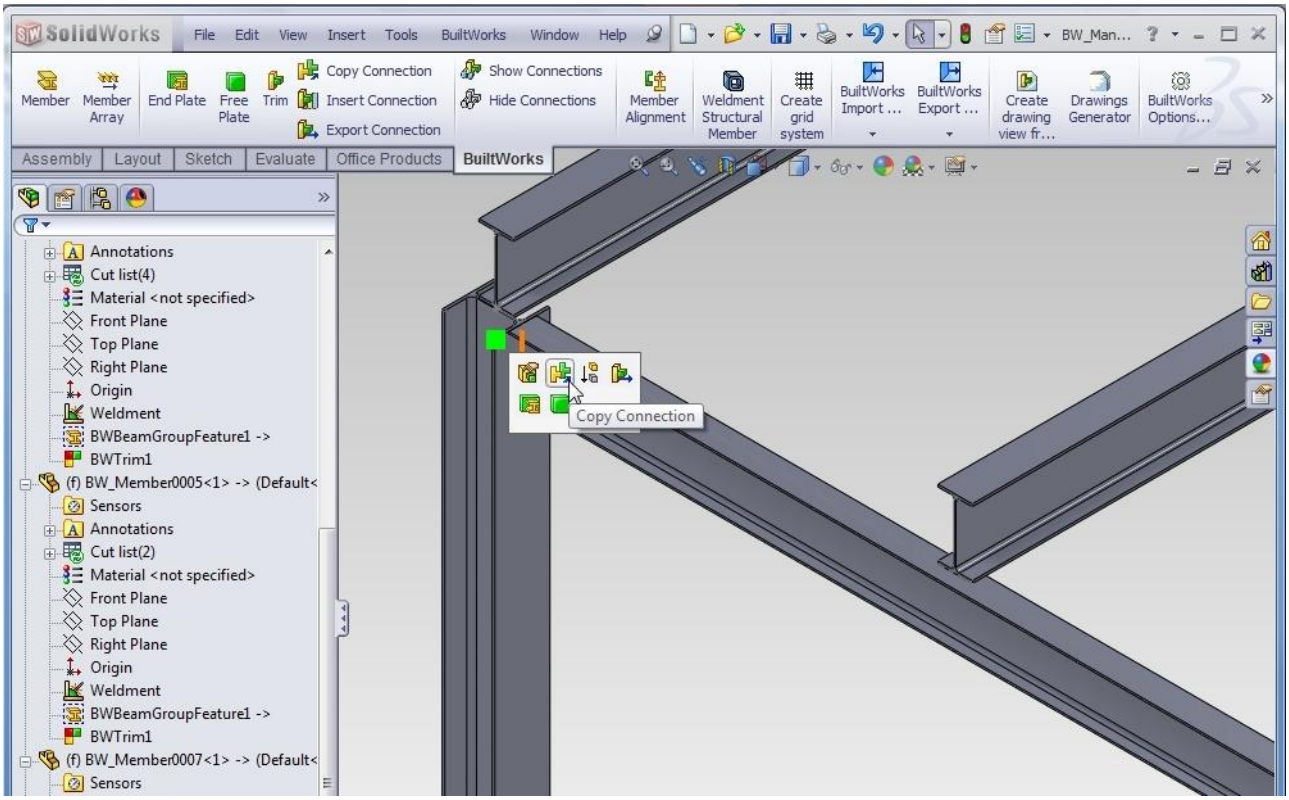

Fig. 39 Choosing Copy Connection command from existing connection's context menu

3. New window **Connections library** will be opened. To start inserting Connection click **Insert** button. In the connection's **Preview window** there will be red blinking member (in this case – Column), which instructs to select the corresponding member of the model in another place (another Column), where connection should be copied. Select appropriate column member of the model in graphic view.

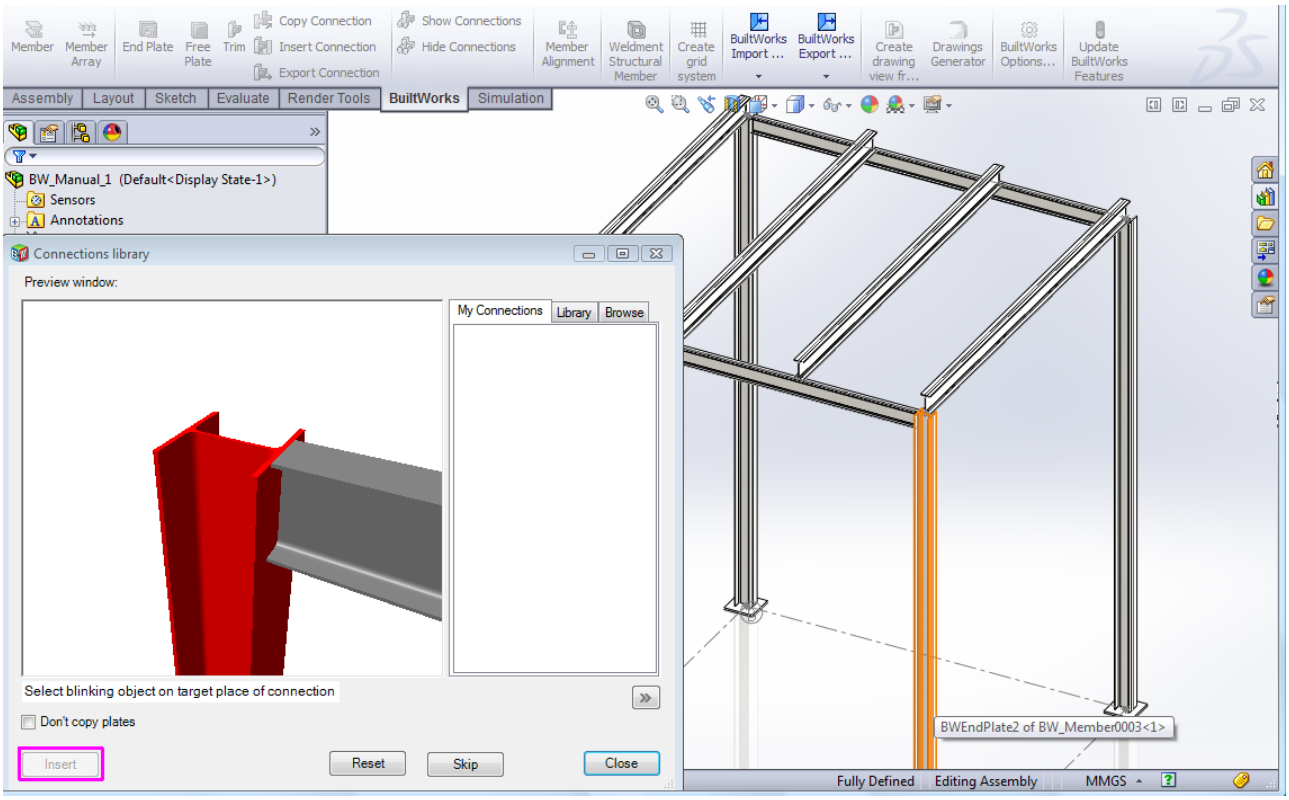

Fig. 40 Selecting Column, as instructed in Connection's Preview window

Note: You may want to zoom and rotate graphic model in preview window to understand better what is highlighted in red blinking color, so that the appropriate member in model could be selected. You can also zoom and rotate your model in graphic view before selecting needed member. Note also, that connecting members in the model can come to each other in different angles (from different side) than in the preview window – it is normal, because Copy Connection function does not copy geometry, but rather applies a set of engineering rules, stored in the connection which is being copied.

4. After selecting first member in a graphic view, the red blinking color of first member in the **Preview window** will change to steady pink color, and the highlight in the **Preview window** will change to another member (in this case - Beam) – it will be highlighted in red blinking color, instructing to select second member (Beam) in graphic view. In the model graphic view select the appropriate beam member, which connects to earlier selected beam.

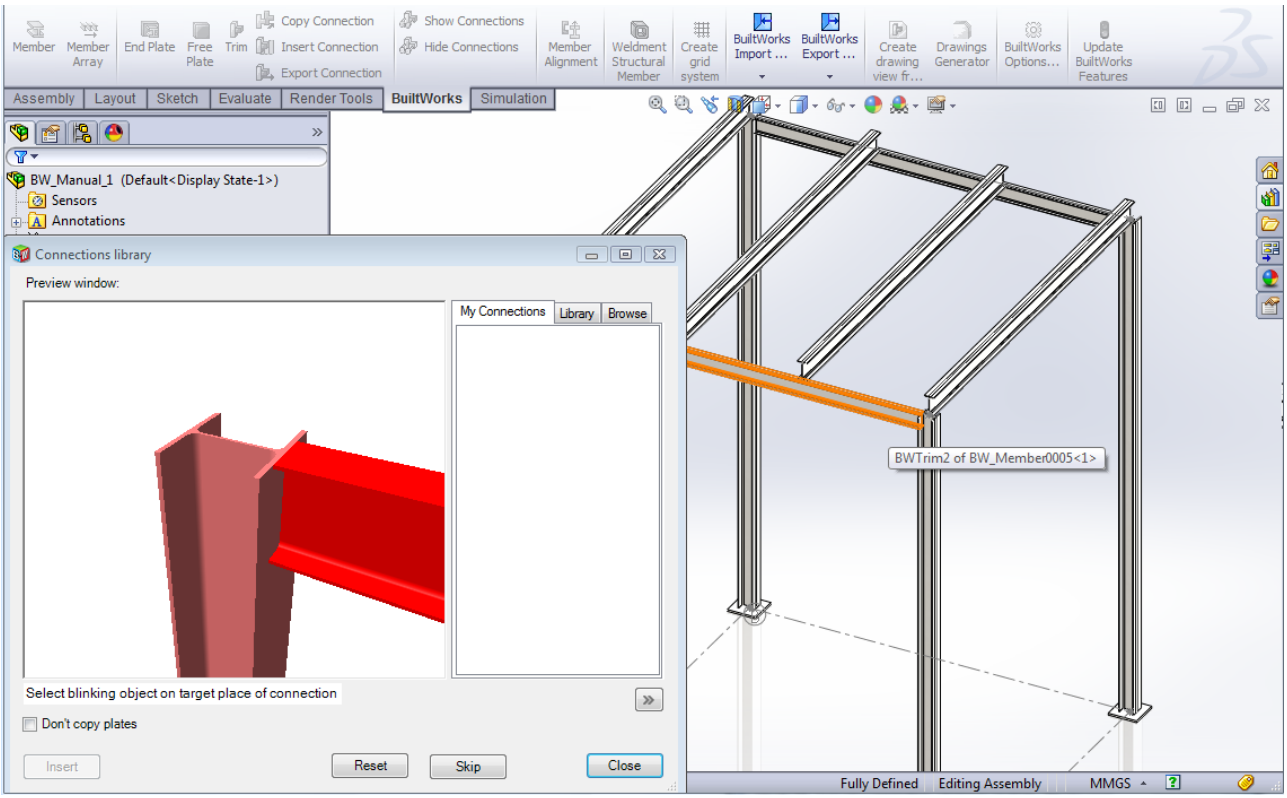

Fig. 41 Selecting Beam as instructed in Connection's Preview window

5. After selecting second member in graphic view, all members from the Preview window will be used, and a new connection will be immediately created – Beam will be trimmed by Column according to engineering rules, set in the connection that is being copied (blue square dot will appear at the place of a new connection).

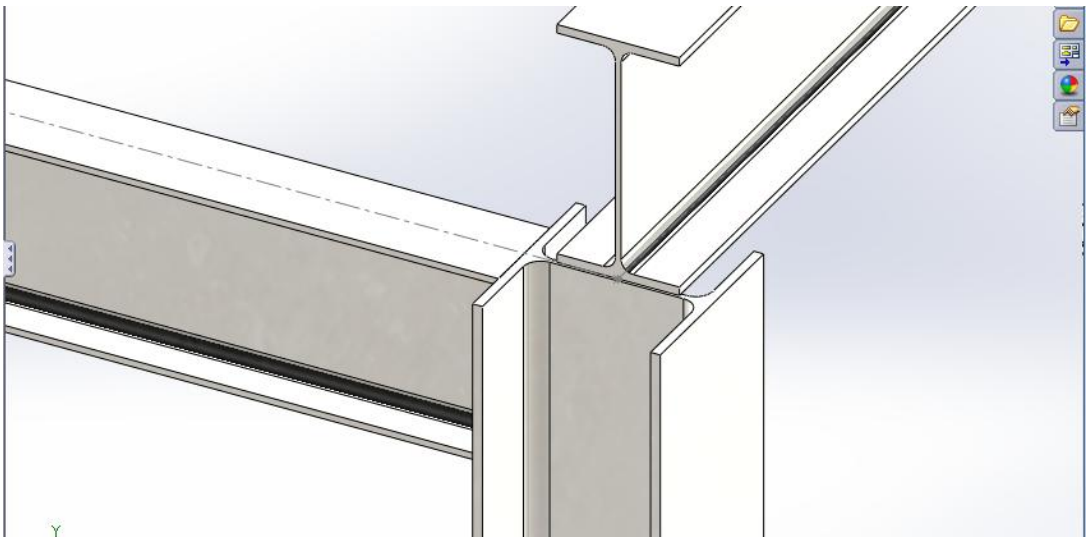

Fig. 42 New Connection created by copying

6. Repeat this action for remaining two corners of the model, where Beam-to-Column connection is applicable and close preview window. Note BWConnection objects that will appear in the Feature Tree view after each new connection will be created.

   Note: if some parts of the model in the Feature Tree will be marked with the Traffic Lights icon, use **Update BuiltWorks Features** button in BuiltWorks menu to update your model. Function "Update BuiltWorks Features" works faster than SolidWorks "Rebuild" function for assemblies, in which parts are automatically created from assembly mode using BuiltWorks modeling tools.

7. Hide blue dots representing created connections – click on the **Hide Connections** button (BuiltWorks toolbar).

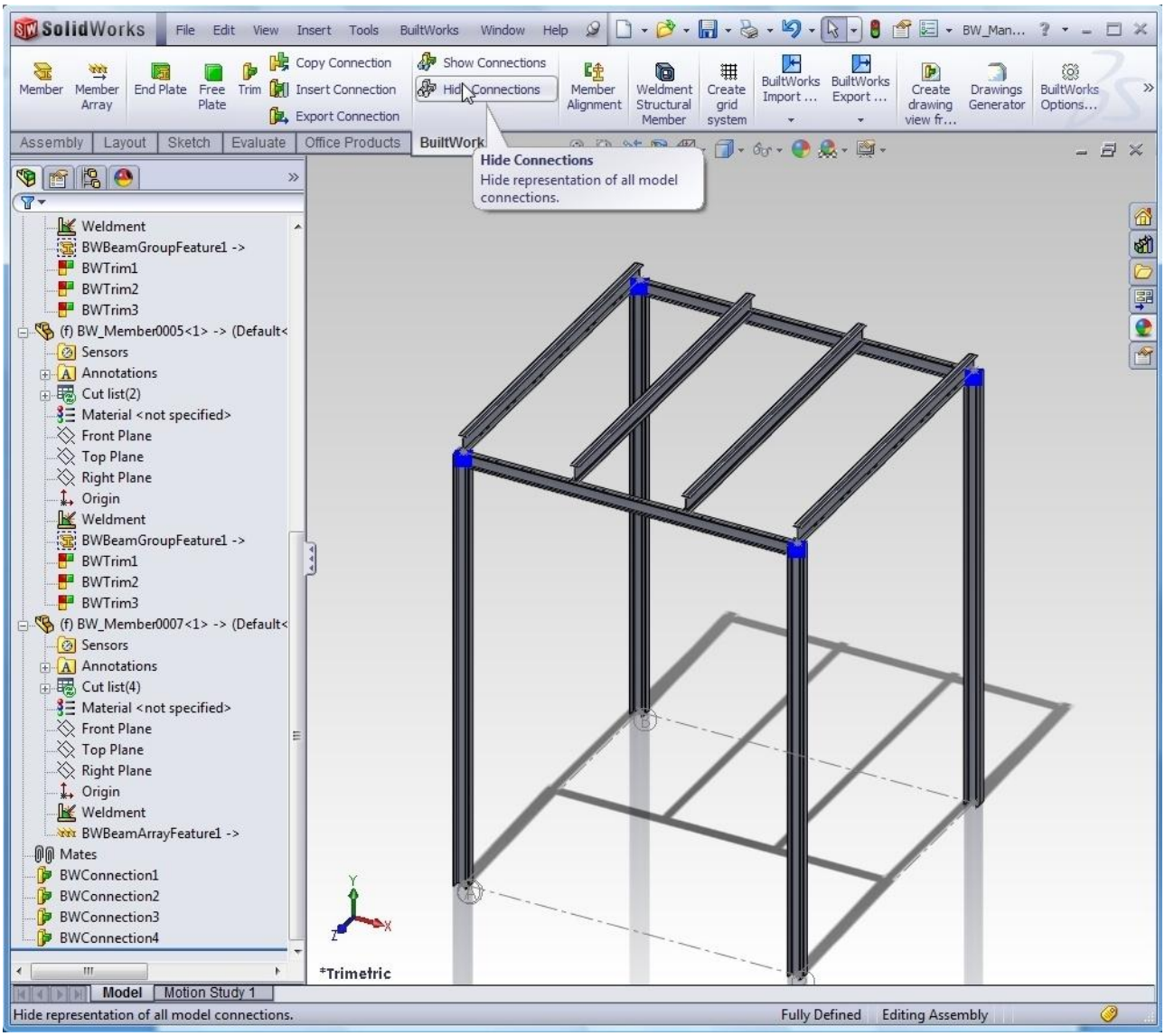

Fig. 43 Copying Connections – Final result

XII. Creating an End Plate

In this chapter you will perform another Connection detailing function – create the End Plate for the member (Column base plate).

Note, that creating the End Plate also creates the connection – the rule of creating End Plate with all parameters which can be copied to another place equally as copying the connection with trimming rules. Connection can have a combined set of rules (some members trimmed, some have end plates added) and all these rules will be applied in another place where connection is copied.

1. To create the end plate click **End Plate** button (BuiltWorks toolbar).

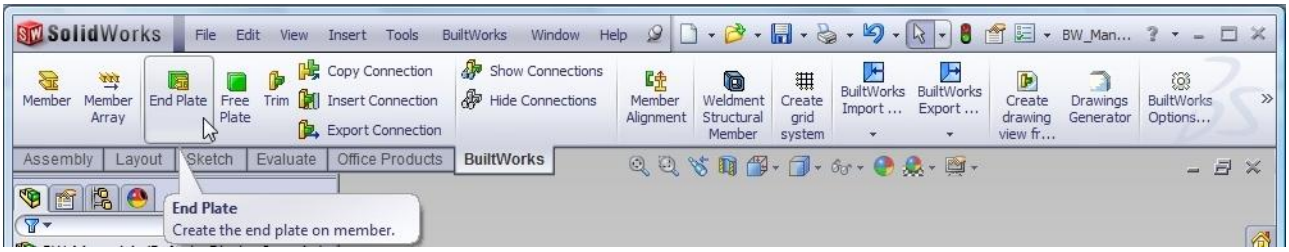

Fig. 44 Start creating End Plate

2. In **End Plate** dialog box **Method of creation** field choose **End plate on body** option (it is chosen by default) and select one column member in graphic window, by clicking over its part nearby bottom (note – clicking over the part nearby top would cause creating the end plate on the top of column). Define parameters of End Plate:
   a. Enter plate thickness **30** mm
   b. Select profile type **Quadratic**,
   c. Choose **Constant** parameter and enter value of dimension –**450** mm.

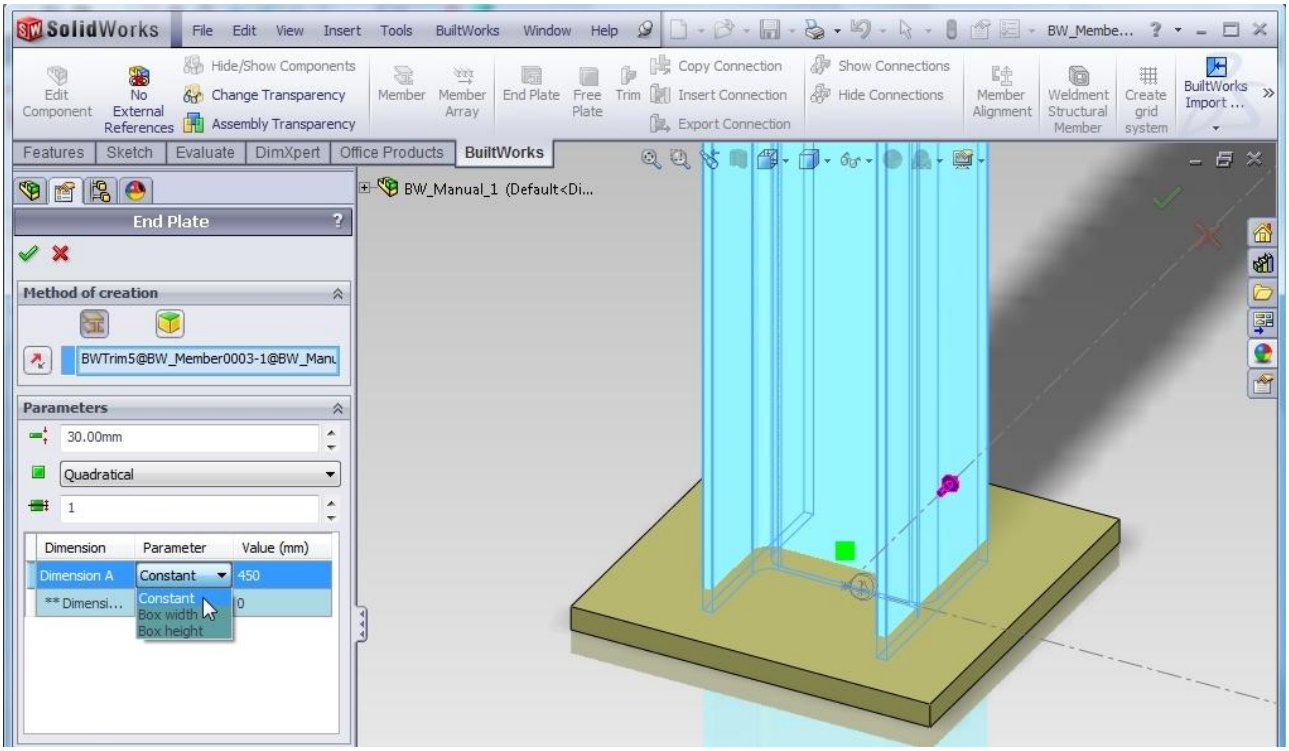

Fig. 45 End Plate data input dialog box

3. Click **OK** ✔ . End Plate will be created.

4. In the same way create all another end plates.

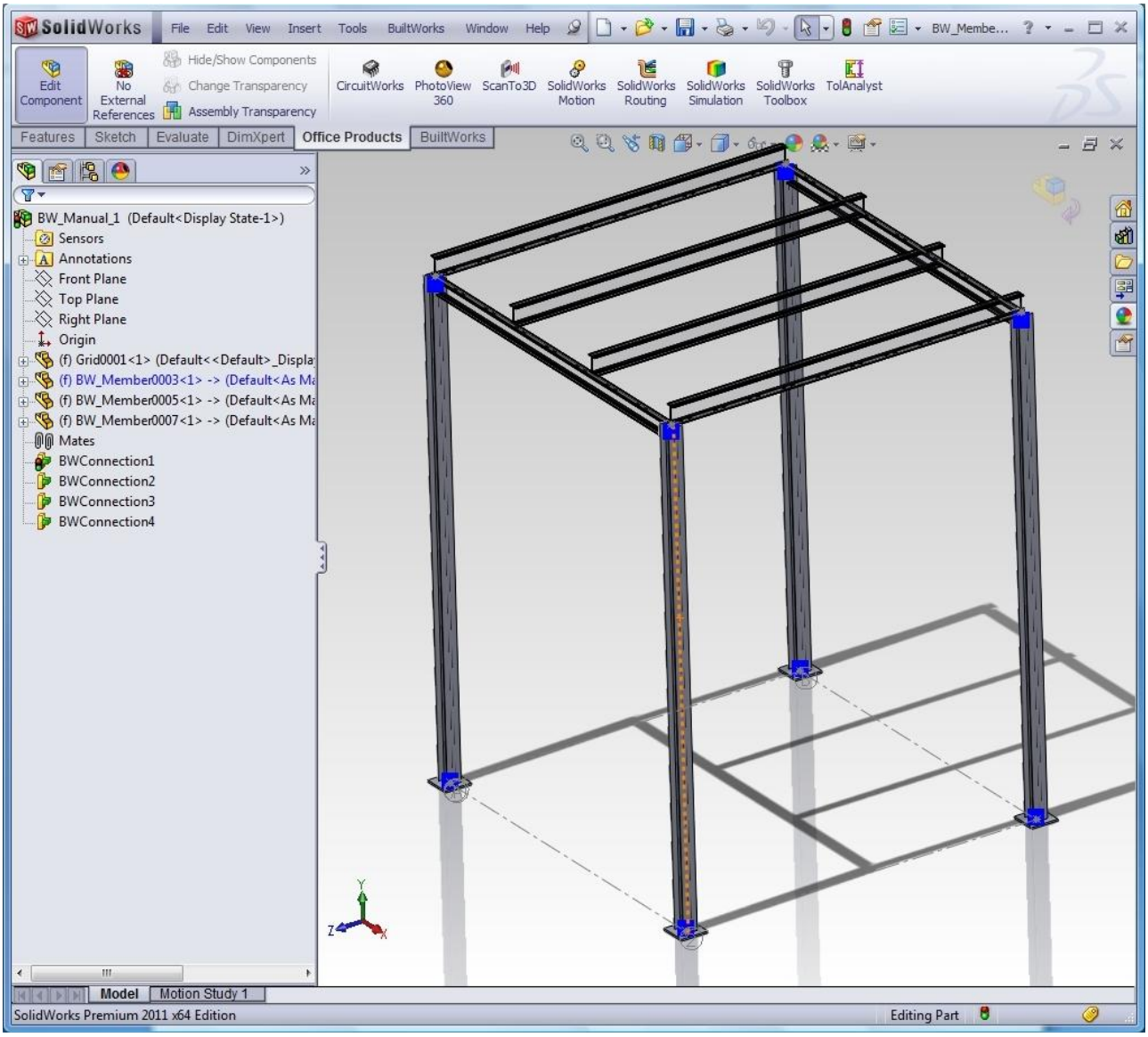

Fig. 46 Model with End Plates – Final result

NOTE! Please save all your work before proceeding to the next chapter "Generating Drawings and BOM".

XIII. Generating Drawings and BOM

In this final chapter of the tutorial you will learn how to automate the preparation of Drawings of the designed structure and insert the Bill of Materials (BOM). Drawings and BOMs are used later in manufacturing and erection of the structure. BOM for BuiltWorks model is created basing on cut-list properties of both – SolidWorks documents as well as BuiltWorks custom properties.

1. To assign cut list properties for all members select **BuiltWorks > Update Cut-list Properties** (BuiltWorks pull-down menu) command. This BuiltWorks command, comparing to similar SolidWorks command, updates properties of all objects in all part documents throughout the whole assembly with a single click.

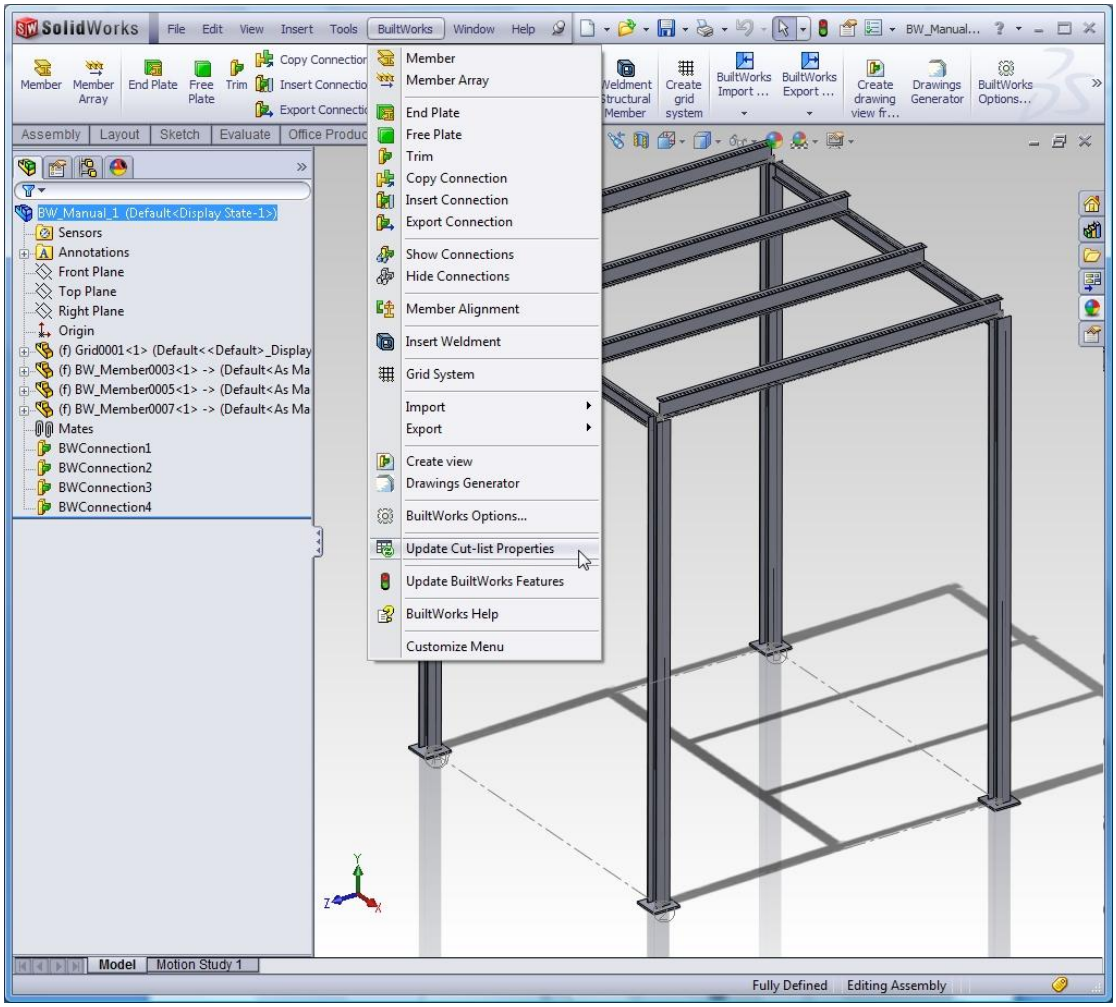

Fig. 47 Updating cut list properties

2. To start generating drawings for assembly and members select **Drawing Generator** button (BuiltWorks toolbar).

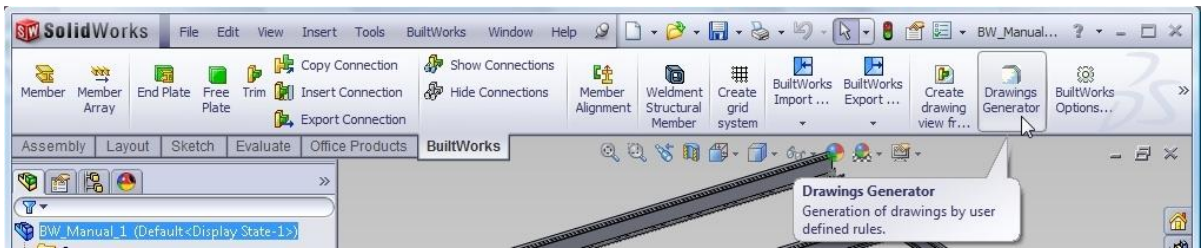

Fig. 48 Starting Drawings Generator

3. In opened **Drawing generation** window mark parts for which you want to generate drawings. In this case we will create only one drawing for the whole assembly – so check box next to **assembly** object in the list (first entry). For **Drawings generation type** choose **Using generation styles**. Make sure the option **Create grid representation** is checked.

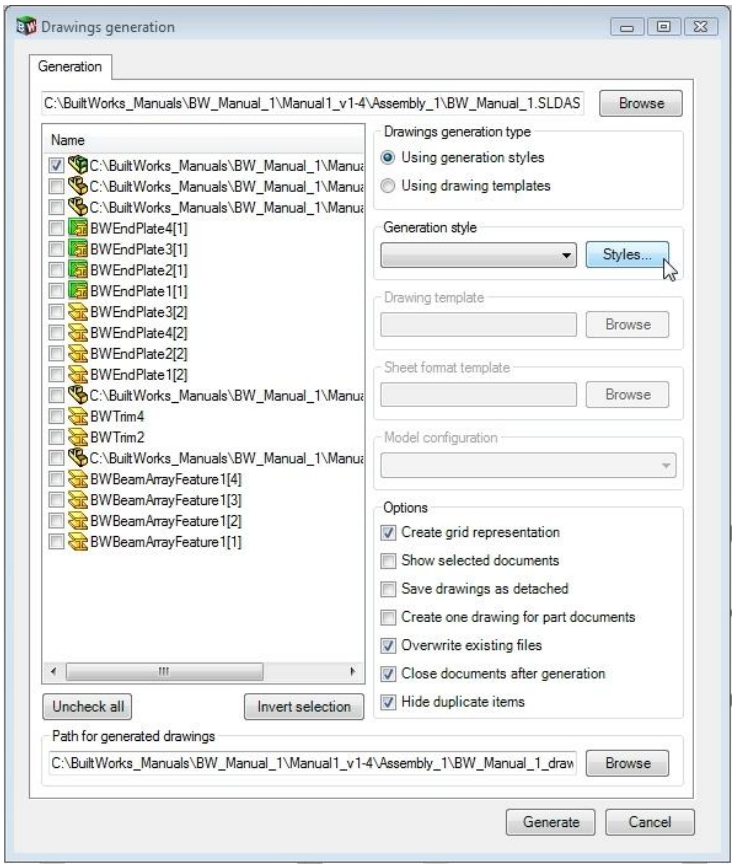

Fig. 49 Defining parameters for automatic generation of Drawings

4. If you want to setup or modify the Style of the drawing layout, click button **Styles…** The **Drawings generation styles** dialog window will appear, here you can choose a template for your style, define views that have to be created for chosen type of the drawing, define scaling options, save these definitions of styles under **new** name. Click **OK** to return to previous window.

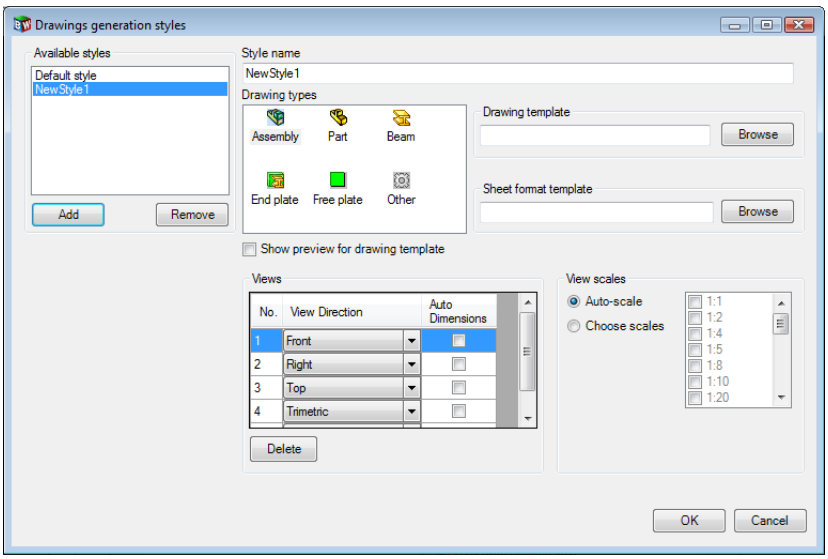

Fig. 50 Defining Style options

5. Drawings will be generated after clicking **Generate** button in **Drawings generation** dialog. Drawings for selected parts will be created and the report will be presented. Click **Yes** button if you want to open the generated Drawings for further editing. Click **No** if you want to return to 3D model.

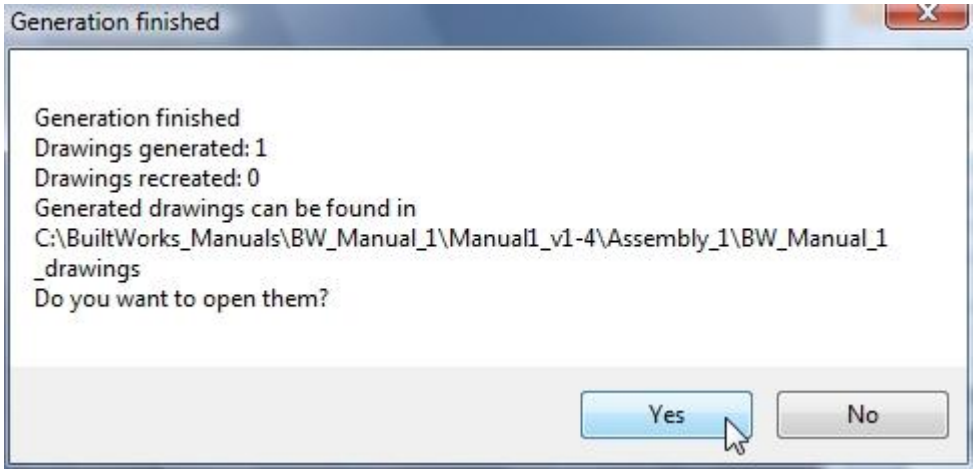

Fig. 51 Report of automatic generation of Drawings

6. If you will need to move views in the generated Drawing sheet, the annotations for grid lines will not be updated automatically – hit **Ctrl+Q** to force updating of the views and annotations for grid lines will be updated in whole drawing. You may want to add additional sketches, texts or annotations in the Drawing sheet using standard SolidWorks drawing tools.

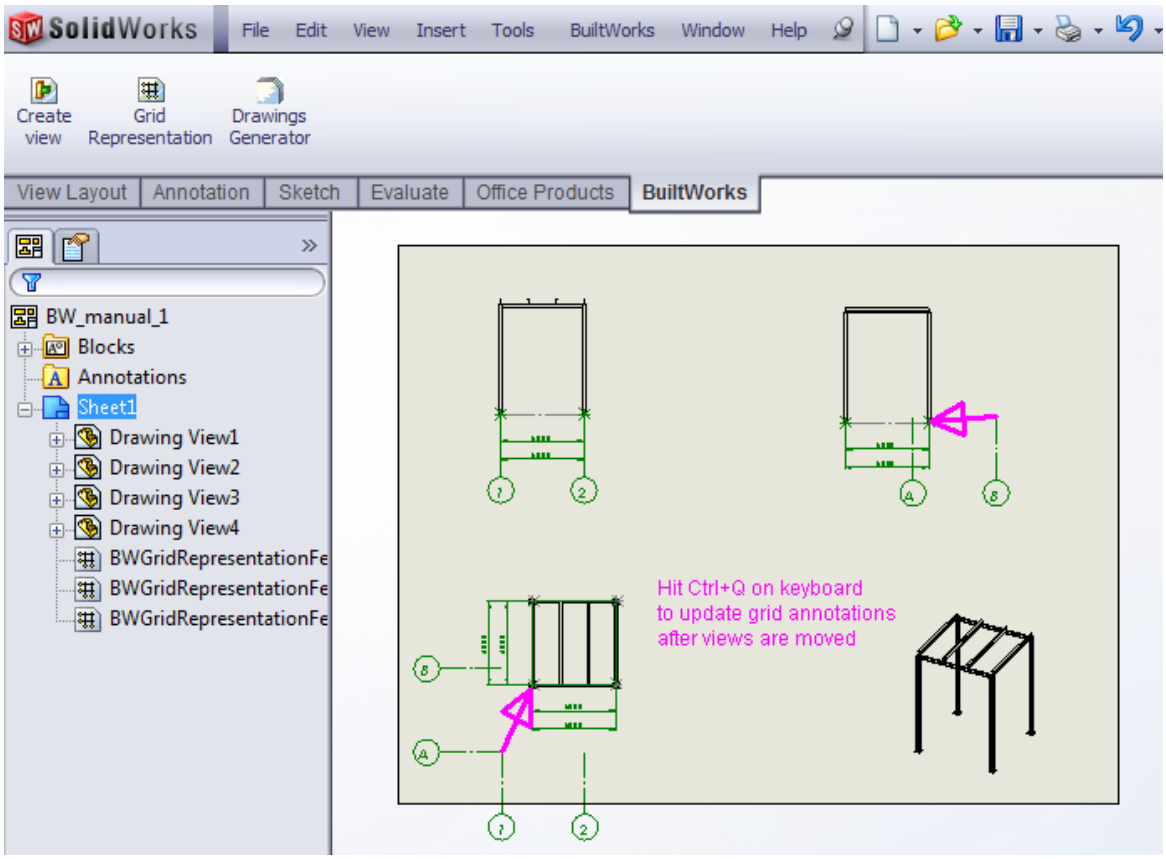

Fig. 52 Updating Drawing views after moving view components

7. **Bill of Materials** (BOM) is also created using standard SolidWorks functionality. To insert **BOM** into the drawing, select **Annotation toolbar > Tables > Bill of Materials** button.

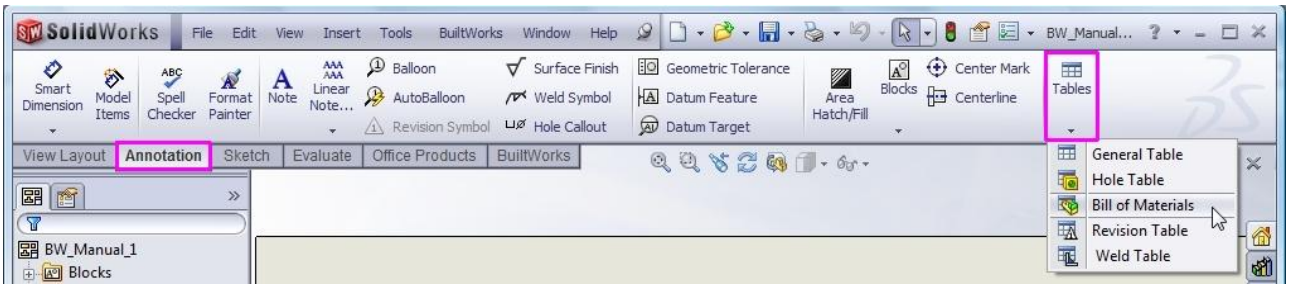

Fig. 53 Bill of Materials creation

8. Select a drawing view to specify the model for creating a Bill of Materials.
9. Define other BOM parameters.

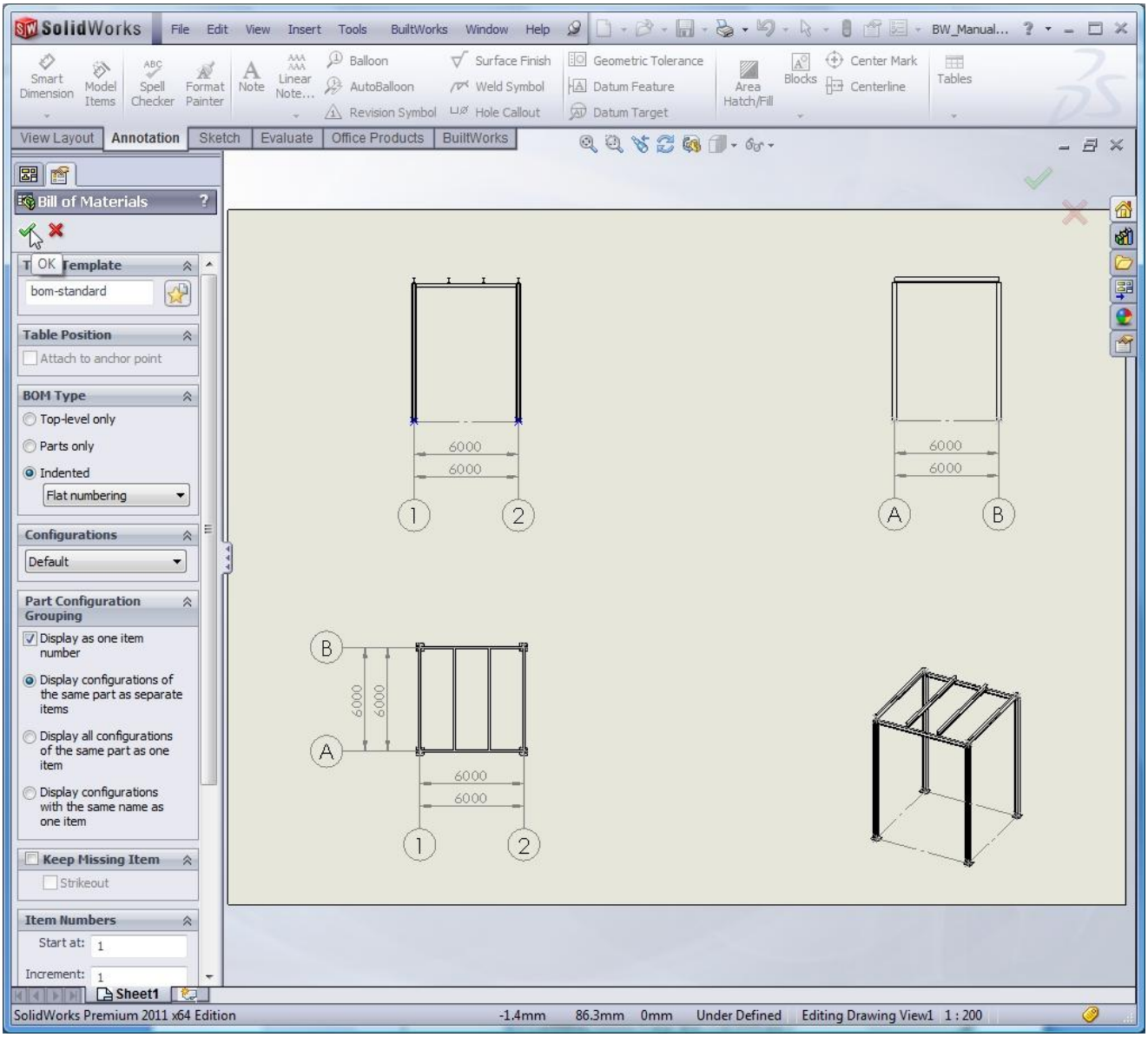

Fig. 54 Defining BOM parameters

10. Click **OK** ✔ and place table of BOM into the generated drawing.

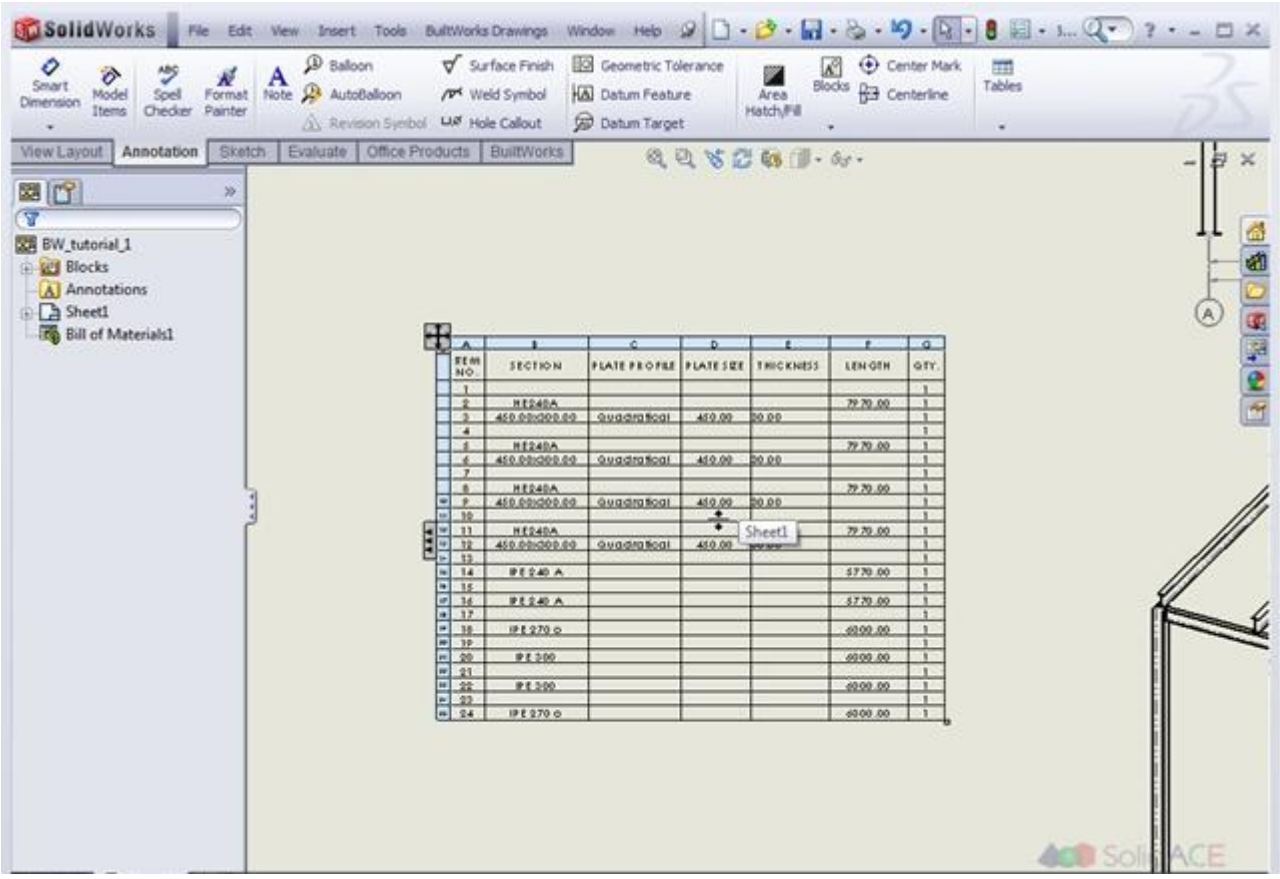

Fig. 55 Placing BOM into the Drawing

Congratulations! You have completed this tutorial.

User Notes

✍ We appreciate your feedback and comments about BuiltWorks functionality and this document. Please send your suggestions of requests to us by email info@solidace.com